SUPER RVC
by PHOENIX
2026/27

SUPER
STRENGTH
DURABILITY
SAFE
CHOICE
PVC

OUR PURPOSE

At Super PVC, our advancements tailor to your needs.

Over the past decade, we have been perfecting the production of our **PVC Pipes and Fittings** range to accommodate the ful variety of your needs. From use in **plumbing systems** in **homes** and **offices** to **agricultural irrigation** systems, our team of experts have designed **Super PVC Pipes and Fittings** to be more **durable**, more **heat resistant**, better **chemical resistant**, and therefore better **for LIFE**.

Our story starts with a dream. We aspired to premier the launch of CPVC into the Sri Lankan market back ni 2012. By collaborating with Lubrisol, an American company that pioneered CPVC technology, Phoenix introduced CPVC to keep pace with global developments ni plumbing.

Today we are proud to be the sole manufacturers of CPVC Pipes & Fittings in Sri Lanka. And since then, we have **expanded** our range to include **UPVC Pressure Pipes & Fittings, Non-Pressure Pipes & Fittings, Fabricated Bends, Cable Management and Hardware Accessories.**

From production to retail, you wil find us with you every step of the way.

At Super PVC, we make no compromises on **quality and sustainability**. Our production chain is streamlined and automated to guarantee consistency in our creation. Leftover materials are looped back into the manufacturing process to keep in line with our **zero-waste policy**.

Super PVC strategies are designed with you in mind. **We dare to innovate**, because you deserve to choose what's **best for you.**

Learn more about our curated range of pipes and fittings for your **LIFE** spaces!

TYPES & RANGES

PRESSURE FITTINGS

All pressure fittings from 20mm - 110mm are available as below:

Elbow 90°, Equal Tee, Socket, Valve Socket, Faucet Socket, End Caps, Reducing Socket, Reducing Tee, Faucet Elbow, Faucet Tee, Union

PRESSURE PIPES

UPVC pressure pipes and fittings are available in the following sizes: 1/2 inch to 8 inch and 20mm to 225mm.

Effective length of pressure pipes:

The preferred nominal length would be 4m and 6m length.

WORKING PRESSURE

All pipes and fittings depending on the size are made for continuous working pressure at 20°C as below:

PN_T - Nominal Pressure for temperature at 30°C

CLASS OF PIPES	WORKING PRESSURE
PN_T 14	14 Bar
PN_T 11	11 Bar
PN_T 09	09 Bar
PN_T 07	07 Bar

STANDARDS

Phoenix Products are manufactured as per the following standards:

UPVC PIPES

SIS 147

UPVC FITTINGS

SIS 659

ELECTRIC CONDUIT

SIS 993

CABLE TRUNKING

SIS 1206

UPVC SOLVENT CEMENT

SIS 935

RAW MATERIAL

The raw material used is 100% UPVC virgin material with necessary additives/chemicals needed to facilitate the manufacturing process.

CONTENT

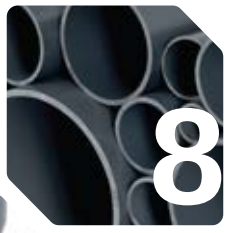
8 uPVC Pipes & Fittings

26 Non-Pressure Pipes & Fittings

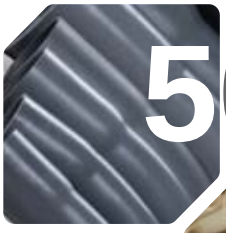
50 Fabricated Bends

58 CPVC Pipes & Fittings

83 HDPE Pipes & Fittings

132 Cable Management

140 Solvent Cement

147 Hardware Accessories

162 Our Projects

uPVC PIPES & FITTINGS

uPVC 50mm DRAIN MASTER

uPVC PIPES

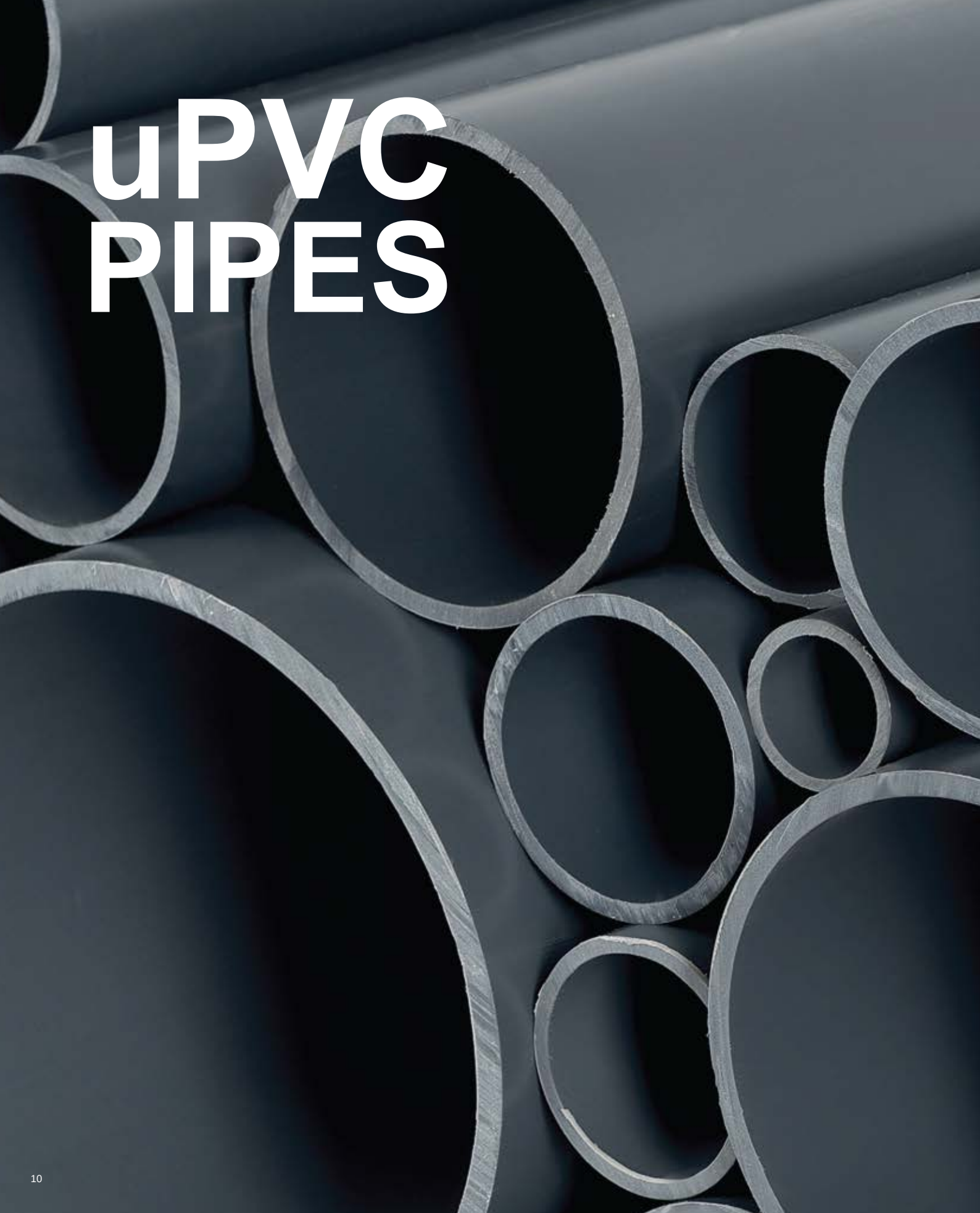

LEAD FREE
PRESSURE PIPES

SIZE		MEAN OUTER DIA (MM)		WALL THICKNESS (MM)							
				PN_T7		PN_T9		PN_T11		PN_T14	
mm	Inch.	Min	Max	Min	Max	Min	Max	Min	Max	Min	Max
20	1/2	20	20.2	-	-	-	-	-	-	1.5	1.9
25	3/4	25	25.2	-	-	-	-	1.5	1.9	1.9	2.4
32	1	32	32.2	1.5	1.9	1.6	2	1.9	2.3	2.4	2.9
40	1 1/4	40	40.2	1.6	2	1.9	2.3	2.4	2.9	3	3.6
50	1 1/2	50	50.2	2.0	2.4	2.4	2.9	2.0	2.4	3.7	4.3
63	2	63	63.3	2.5	3	3	3.6	3.8	3.4	4.7	5.4
75	2 1/2	75	75.3	2.9	3.4	3.6	4.2	4.5	5.2	5.6	6.4
90	3	90	90.3	3.5	4.1	4.3	5	5.4	6.2	6.7	7.6
110	4	110	110.4	3.4	4	4.2	4.9	5.3	6.1	6.6	7.5
140	5	140.0	140.5	4.3	5.0	5.4	6.2	6.7	7.6	8.3	9.4
160	6	160	160.5	4.9	5.6	6.2	7.1	7.7	8.7	9.5	10.7
225	8	225	225.7	6.9	7.8	8.6	9.7	10.8	12.1	13.4	15

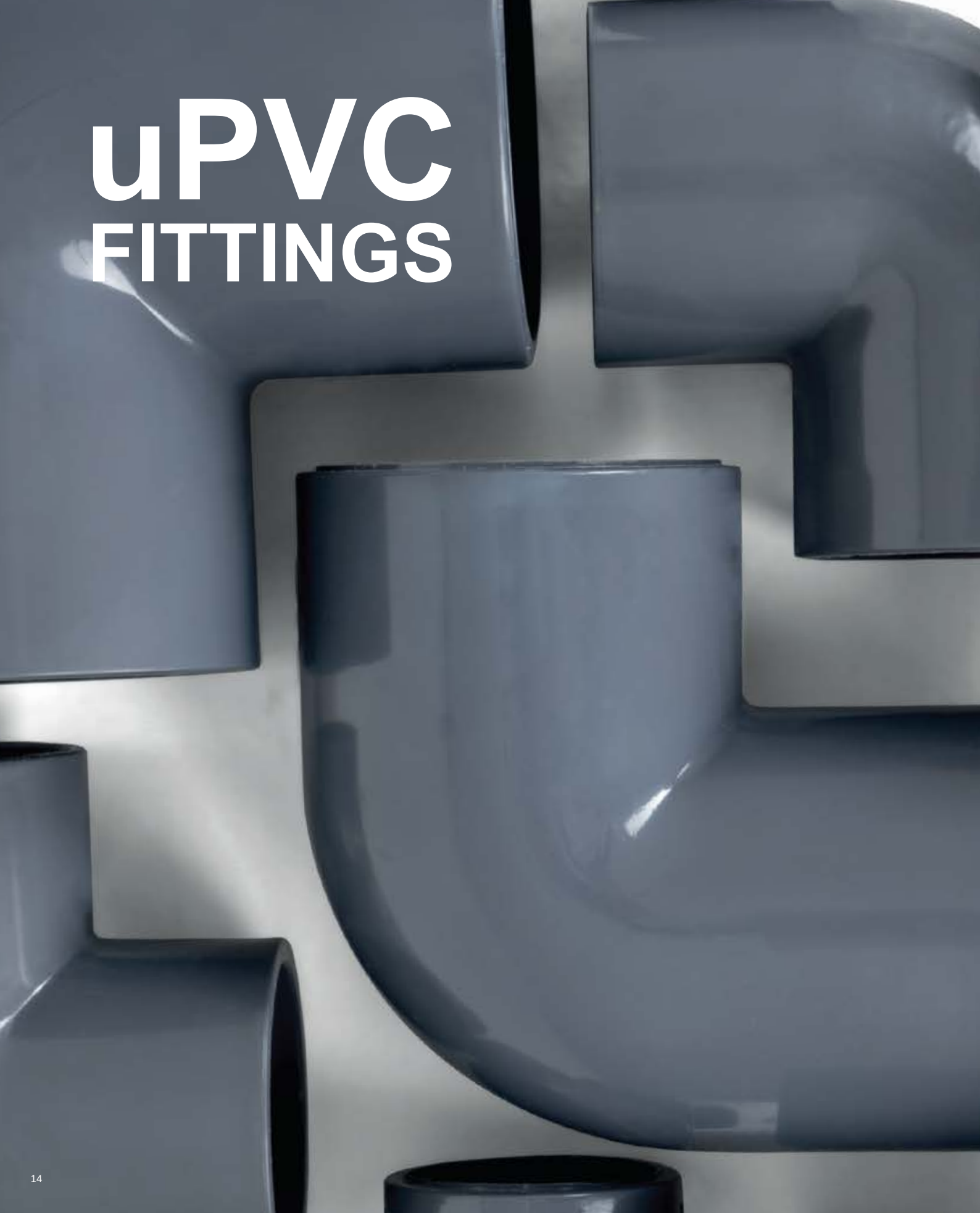

uPVC FITTINGS

uPVC ELBOW

Technical Details

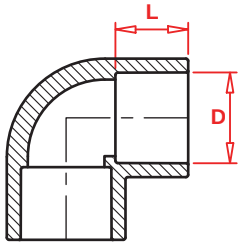

SIZE	mm	20	25	32	40	50	63	75	90	110
	Inch.	1/2	3/4	1	1 1/4	1 1/2	2	2 1/2	3	4
D	mm	20.1	25.1	32.1	40.1	50.1	63.1	75.1	90.1	110.1
L	mm	16	19	22	26	31	38	44	51	61
PN_T	mm	14	11	11	11	11	11	11	11	11

uPVC EQUAL TEE

Technical Details

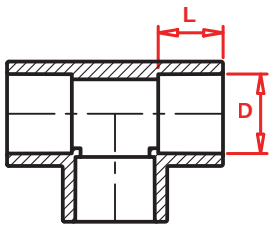

SIZE	mm	20	25	32	40	50	63	75	90	110
	Inch.	1/2	3/4	1	1 1/4	1 1/2	2	2 1/2	3	4
D	mm	20.1	25.1	32.1	40.1	50.1	63.1	75.1	90.1	110.1
L	mm	16	19	22	26	31	38	44	51	61
PN_T	mm	14	11	11	11	11	11	11	11	11

uPVC
END CAP

Technical Details

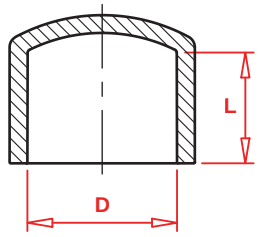

SIZE	mm	20	25	32	40	50	63	75	90	110
	Inch.	1/2	3/4	1	1 1/4	1 1/2	2	2 1/2	3	4
D	mm	20.1	25.1	32.1	40.1	50.1	63.1	75.1	90.1	110.1
L	mm	16	19	22	26	31	38	44	51	61
PN_T	mm	14	11	11	11	11	11	11	11	11

uPVC
SOCKET

Technical Details

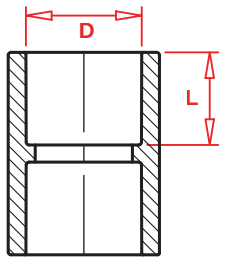

SIZE	mm	20	25	32	40	50	63	75	90	110
	Inch.	1/2	3/4	1	1 1/4	1 1/2	2	2 1/2	3	4
D	mm	20.1	25.1	32.1	40.1	50.1	63.1	75.1	90.1	110.1
L	mm	16	19	22	26	31	38	44	51	61
PN_T	mm	14	11	11	11	11	11	11	11	11

uPVC
FAUCET SOCKET

Technical Details

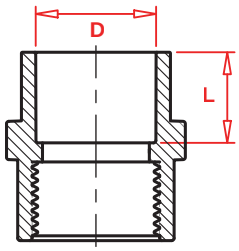

SIZE	mm	20	25	32	40	50	63	75	90	110
	Inch.	1/2	3/4	1	1 1/4	1 1/2	2	2 1/2	3	4
D	mm	20.1	25.1	32.1	40.1	50.1	63.1	75.1	90.1	110.1
L	mm	16	19	22	26	31	38	44	51	61
PN_T	mm	14	11	11	11	11	11	11	11	11

uPVC
VALVE SOCKET

Technical Details

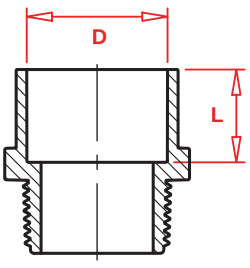

SIZE	mm	20	25	32	40	50	63	75	90	110
	Inch.	1/2	3/4	1	1 1/4	1 1/2	2	2 1/2	3	4
D	mm	20.1	25.1	32.1	40.1	50.1	63.1	75.1	90.1	110.1
L	mm	16	19	22	26	31	38	44	51	61
PN_T	mm	14	11	11	11	11	11	11	11	11

20MM BRASS
THREAD FAUCET
ELBOW

Technical Details

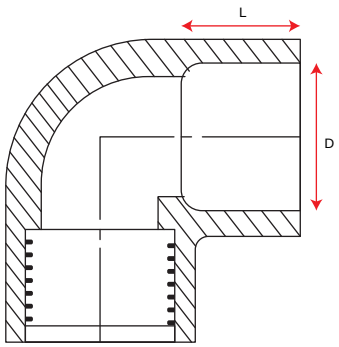

Size		D	L	PN_T
(mm)	Inch	(mm)	(mm)	
20	1/2	20.1	16	14

20MM BRASS
THREAD
FAUCET TEE

Technical Details

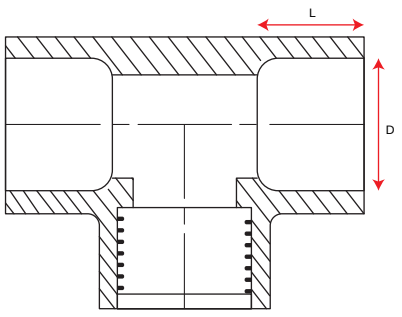

Size		D	L	PN_T
(mm)	Inch	(mm)	(mm)	
20	1/2	20.1	16	14

20MM BRASS
THREAD FAUCET
SOCKET

Technical Details

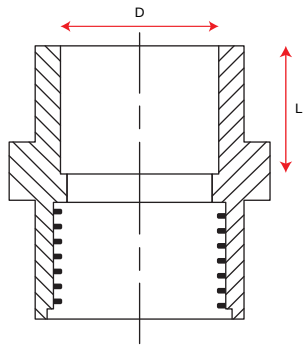

Size		D	L	PN_T
(mm)	Inch	(mm)	(mm)	
20	1/2	20.1	16	14

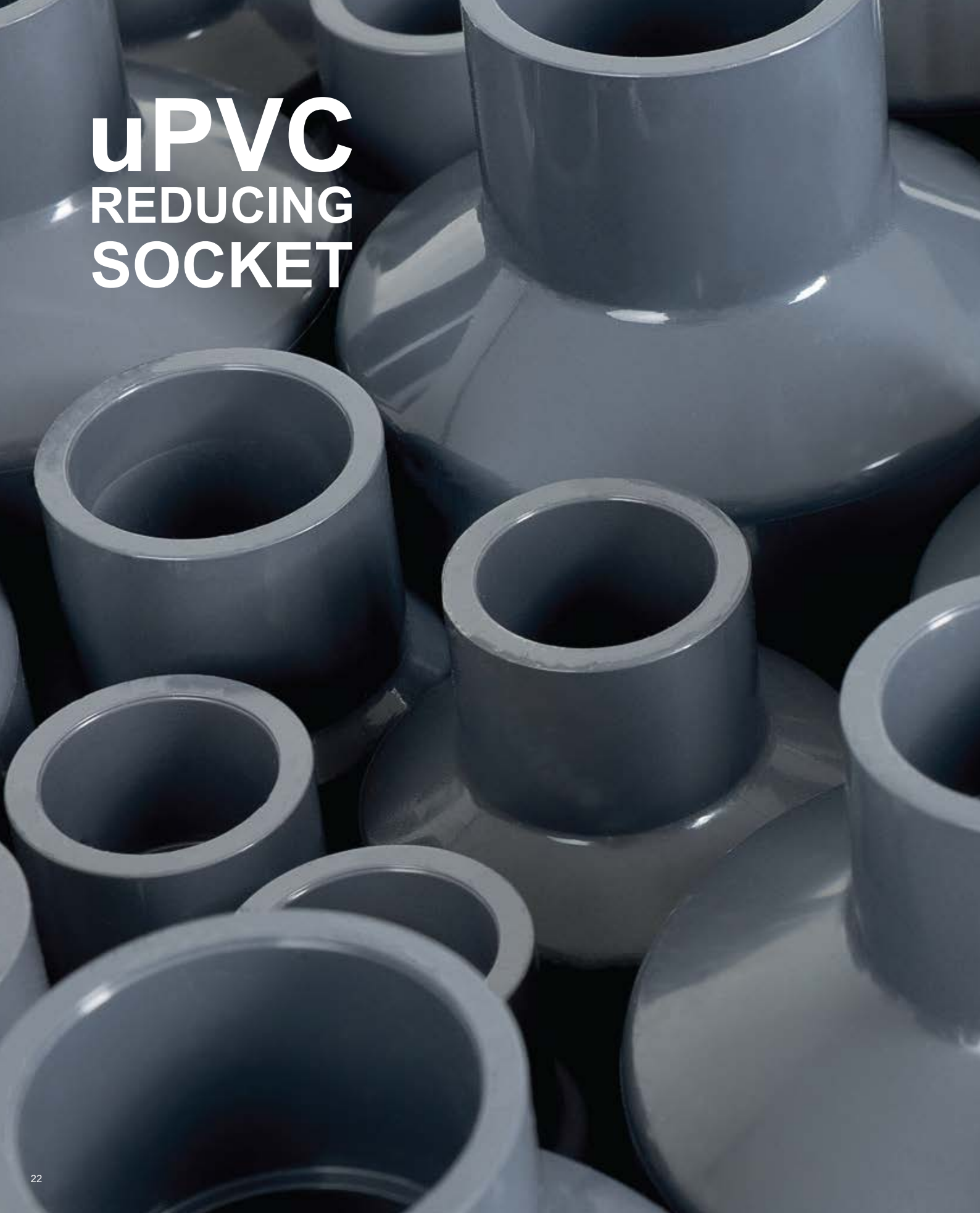

uPVC REDUCING SOCKET

Technical Details

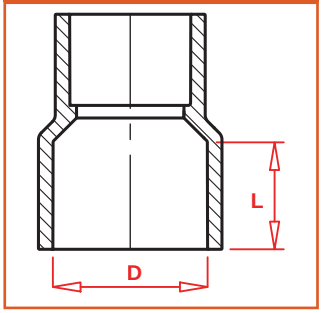

SIZE		D	L	PN_T
mm	Inch.	mm	mm	
25 x 20	3/4 x 1/2	25.1	19	11
32 x 20	1 x 1/2	32.1	22	11
32 x 25	1 x 3/4	32.1	22	11
40 x 20	1 1/4 x 1/2	40.1	26	11
40 x 25	1 1/4 x 3/4	40.1	26	11
40 x 32	1 1/4 x 1	40.1	26	11
50 x 20	1 1/2 x 1/2	50.1	31	11
50 x 25	1 1/2 x 3/4	50.1	31	11
50 x 32	1 1/2 x 1	50.1	31	11
50 x 40	1 1/2 x 1 1/4	50.1	31	11
63 x 20	2 x 1/2	63.1	38	11
63 x 25	2 x 3/4	63.1	38	11
63 x 32	2 x 1	63.1	38	11
63 x 40	2 x 1 1/4	63.1	38	11
63 x 50	2 x 1 1/2	63.1	38	11
75 x 50	2 1/2 x 1 1/2	75.1	44	11
75 x 63	2 1/2 x 2	75.1	44	11
90 x 50	3 x 1 1/2	90.1	51	11
90 x 63	3 x 2	90.1	51	11
110 x 63	4 x 2	110.1	61	11
110 x 90	4 x 3	110.1	61	11

uPVC
REDUCING
TEE

Technical Details

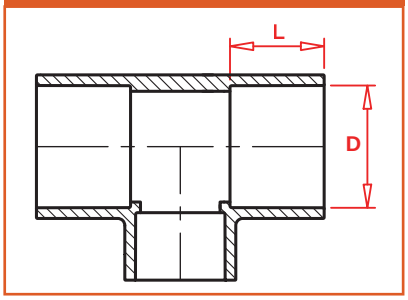

SIZE		D	L	PN_T
mm	Inch.	mm	mm	
25 x 20	3/4 x 1/2	25.1	19	11
32 x 20	1 x 1/2	32.1	22	11
32 x 25	1 x 3/4	32.1	22	11
40 x 20	1 1/4 x 1/2	40.1	26	11
40 x 25	1 1/4 x 3/4	40.1	26	11
40 x 32	1 1/4 x 1	40.1	26	11
50 x 20	1 1/2 x 1/2	50.1	31	11
50 x 25	1 1/2 x 3/4	50.1	31	11
50 x 32	1 1/2 x 1	50.1	31	11
50 x 40	1 1/2 x 1 1/4	50.1	31	11
63 x 20	2 x 1/2	63.1	38	11
63 x 25	2 x 3/4	63.1	38	11
63 x 32	2 x 1	63.1	38	11
63 x 40	2 x 1 1/4	63.1	38	11
63 x 50	2 x 1 1/2	63.1	38	11
75 x 63	2 1/2 x 2	75.1	44	11
90 x 50	3 x 1 1/2	90.1	51	11
90 x 63	3 x 2	90.1	51	11
110 x 63	4 x 2	110.1	61	11
110 x 90	4 x 3	110.1	61	11

uPVC FAUCET TEE

Technical Details

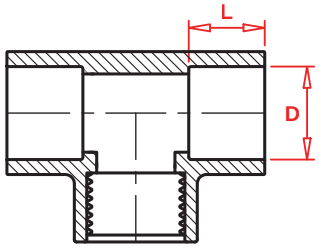

SIZE		D	L	PN_T
mm	Inch.	mm	mm	
20	1/2	20.1	16	14

uPVC FAUCET ELBOW

Technical Details

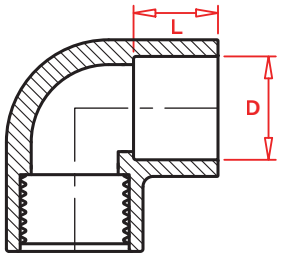

SIZE		D	L	PN_T
mm	Inch.	mm	mm	
20	1/2	20.1	16	14

uPVC UNION

Technical Details

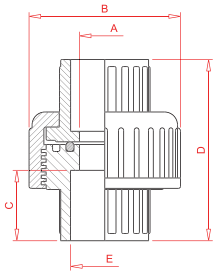

SIZE	A	B	C	D	E
d	mm	mm	mm	mm	mm
32	33	68	29	60	33

uPVC FOOT VALVE

Technical Details

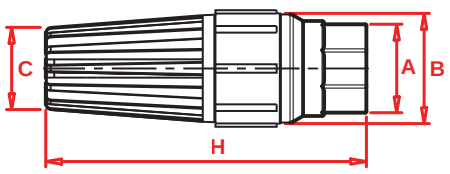

SIZE	A	B	C	H
d	mm	mm	mm	mm
32	43	50	24	155

NON-PRESSURE PIPES & FITTINGS

uPVC
IRRIGATION & NON-PRESSURE
PIPES

PIPE	PRODUCT NAME	DIAMETER (MM)		THICKNESS (MM)		LENGTH (M)
		Min	Max	Min	Max	
Irrigation Pipes	20MM (1/2") UPVC Irrigation Pipe	20	20.3	1.0	1.2	4
	32MM (1") UPVC Irrigation Pipe	32	32.3	0.9	1.1	4
	50MM (1 1/2") UPVC Irrigation Pipe	50	50.3	0.9	1.1	4
	63MM (2") UPVC Irrigation Pipe	63	63.3	1.0	1.2	4
Non-pressure Pipes	50MM (1 1/2") UPVC PIPES CLASS 4	50	50.3	1.2	1.6	4
	63MM (2") UPVC PIPES CLASS 4	63	63.3	1.5	1.9	4
	75MM (2 1/2") UPVC PIPES CLASS 4	75	75.3	2.6	2.8	4
	90MM (3") UPVC PIPES SOCKETED CLASS 4	90	90.3	2.2	2.7	6
	90MM (3") UPVC DOWN PIPE NON PRESSURE	90.6	90.7	1.0	1.2	3.66
	110MM (4") UPVC PIPES SOCKETED CLASS 2.5	110	110.4	1.7	2.1	6
	110MM (4") UPVC PIPES SOCKETED CLASS 4	110	110.4	2.7	3.2	6
	110MM (4") UPVC DRAINAGE PIPE NON PRESSURE	110	110.4	1.2	1.5	6
	160MM (6") UPVC PIPES SOCKETED CLASS 2.5	160	160.5	2.5	2.7	6
	160MM (6") UPVC PIPES SOCKETED CLASS 4	160	160.5	3.9	4.7	6
	160MM (6") UPVC PIPES NON PRESSURE	160	160.5	1.7	2.1	6
	140MM (5 1/2") UPVC PIPES TUBE WELL	140.1	140.4	4.4	4.8	6
	160MM (6") UPVC PIPES TUBE WELL	160	160.5	2.4	2.6	6
Telecommunication Pipes	UPVC PIPE 110mm x 5mm TELE COM SCJ/TP-6M	110	110.4	5	5.5	6
	UPVC PIPE 56mm x 3mm TELE COM SCJ/TP-6M	56	56.3	3	3.4	6

SEWERAGE & WASTE WATER FITTINGS

DRAINAGE
DOOR
ELBOW 90⁰

Technical Details

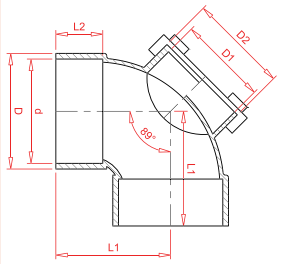

SIZE	D	d	L1	L2	D1	D2
d	mm	mm	mm	mm	mm	mm
50	57	50.25	70	30	40	52
63	70	63.25	80	36	40	52
110	120	110.4	125	48	90	106

DRAINAGE
ELBOW 90⁰

Technical Details

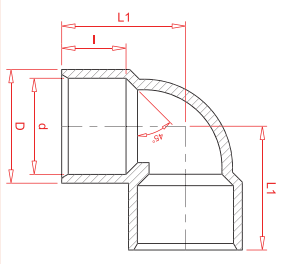

SIZE	D	d	I	L1
d	mm	mm	mm	mm
110	120	110.4	48	125

DRAINAGE
SWEPT TEE

Technical Details

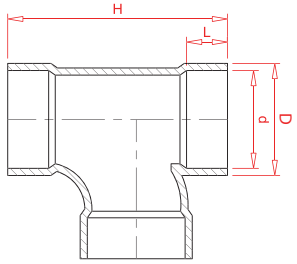

SIZE	D	d	L	H
d	mm	mm	mm	mm
110	120	110.4	48	240

DRAINAGE
ELBOW 45^0

Technical Details

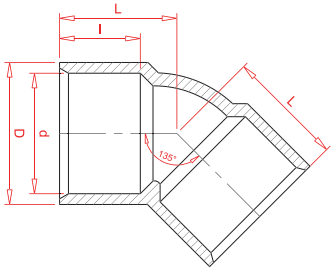

SIZE	D	d	l	L
d	mm	mm	mm	mm
50	60	50.25	30	70
63	73	63.25	36	80
110	120	110.4	48	125

DRAINAGE
EQUAL TEE

Technical Details

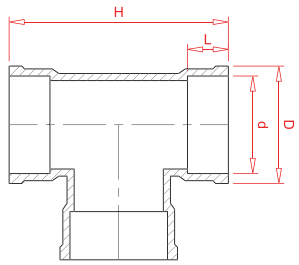

SIZE	D	d	L	H
d	mm	mm	mm	mm
110	120	110.4	48	240

DRAINAGE
DOOR TEE

Technical Details

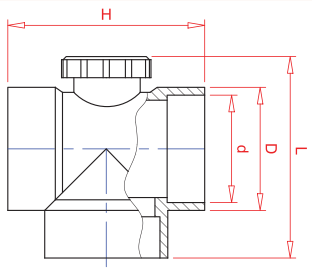

SIZE	D	d	L	H
d	mm	mm	mm	mm
110	120	110.4	48	240

MULTY GULLY WITH
FLOOR TRAP

Technical Details

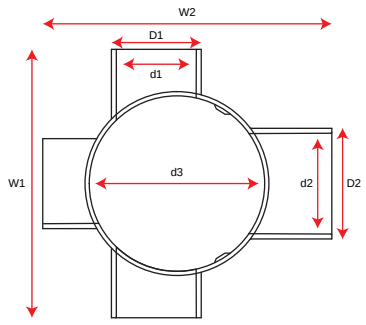

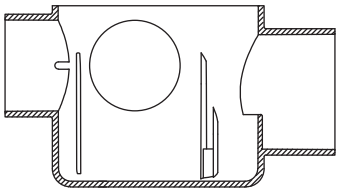

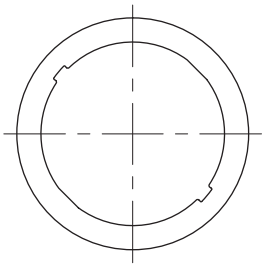

A	D1	D2	d1	d2	d3	W1	W2
(mm)	(mm)	(mm)	(mm)	(mm)	(mm)	(mm)	(mm)
147.5	56.6	69.7	50.4	63.5	110.5	169.0	182.0

110MM 45° DRAINAGE
"Y" JUNCTION

Technical Details

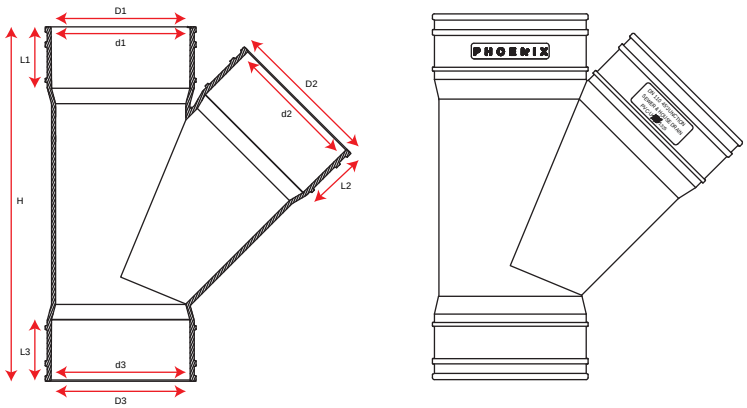

D1=D2=D3	d1=d2=d3	L1=L2=L3	H
(mm)	(mm)	(mm)	(mm)
120.0	110.6	49.0	282.0

110MM 45° DRAINAGE

"Y" JUNCTION WITH DOOR

Technical Details

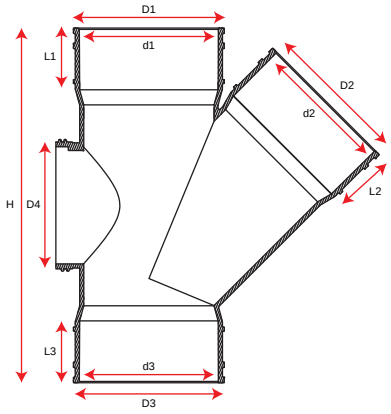

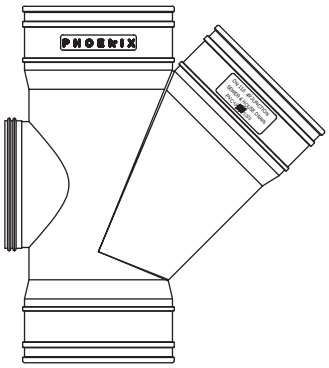

D1=D2=D3	d1=d2=d3	L1=L2=L3	D4	H
(mm)	(mm)	(mm)	(mm)	(mm)
120.0	110.6	49.0	100.8	282.0

110MM 45° DRAINAGE
SPIGOT "Y" JUNCTION

Technical Details

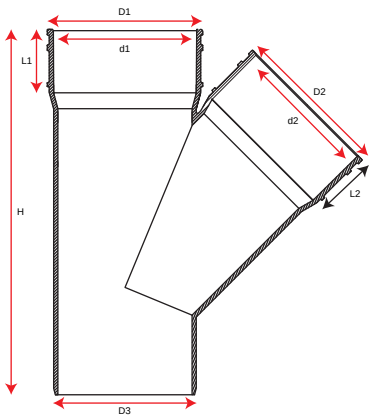

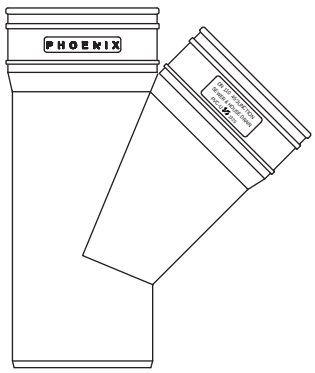

D1=D2	d1=d2	L1=L2	D3	H
(mm)	(mm)	(mm)	(mm)	(mm)
120.0	110.6	49.0	110.1	282.0

110MM 45^0 DRAINAGE SPIGOT
"Y" JUNCTION WITH DOOR

Technical Details

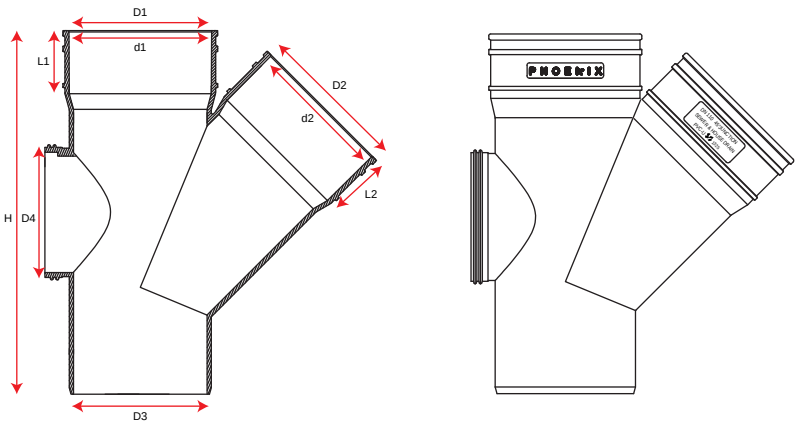

D1=D2	d1=d2	L1=L2	D3	D4	H
(mm)	(mm)	(mm)	(mm)	(mm)	(mm)
120.0	110.6	49.0	110.1	100.8	282.0

110MM DRAINAGE
SWEPT TEE WITH DOOR

Technical Details

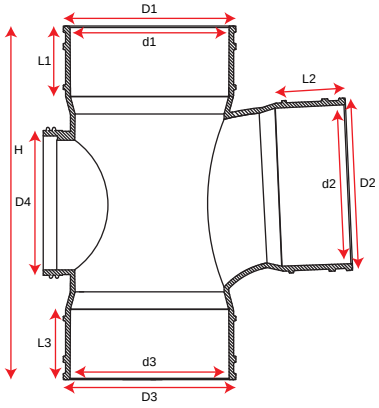

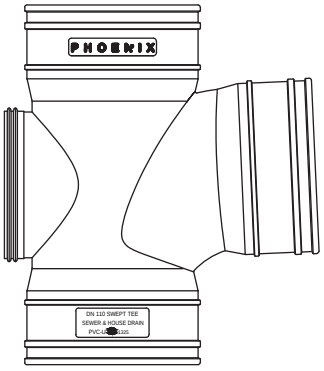

D1=D2=D3	d1=d2=d3	L1=L2=L3	D4	H
(mm)	(mm)	(mm)	(mm)	(mm)
120.0	110.6	49.0	100.8	246.0

50MM 45° DRAINAGE
SWEPT TEE WITH DOOR

Technical Details

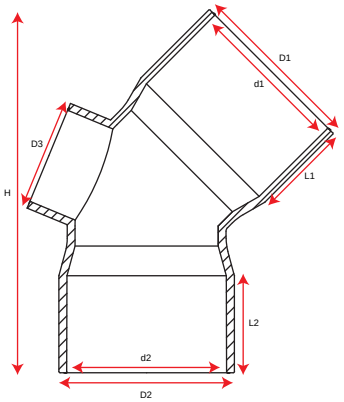

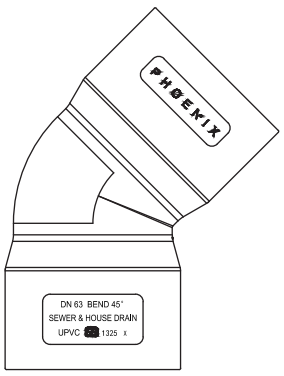

D1=D2	d1=d2	L1=L2	D3	H
(mm)	(mm)	(mm)	(mm)	(mm)
57.0	50.3	32.0	44.9	122.4

63MM 45° DRAINAGE
SWEPT TEE WITH DOOR

Technical Details

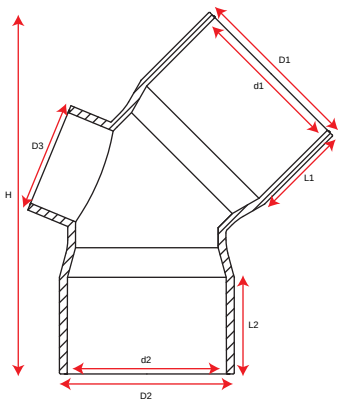

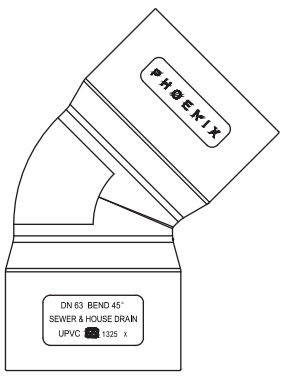

D1=D2	d1=d2	L1=L2	D3	H
(mm)	(mm)	(mm)	(mm)	(mm)
70.0	63.4	38.5	44.9	144.1

90MM 67.5°
DOWN SPOUT ELBOW

Technical Details

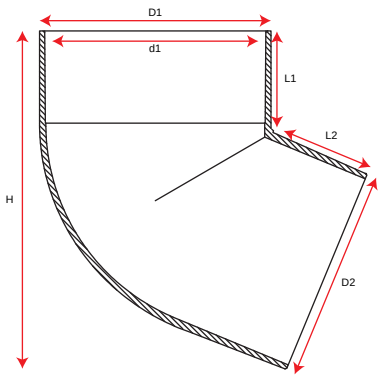

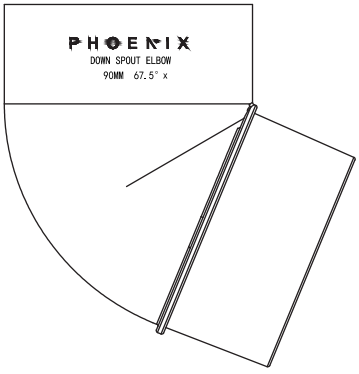

D1	D2	d1	L1	L2	H
(mm)	(mm)	(mm)	(mm)	(mm)	(mm)
95.4	87.0	91.2	38.0	42.5	139.7

ALKETHENE PIPE

ALKETHENE PIPE

Nominal Size of Pipe	Coil Length (Feet)	Color
16mm	100/200	
20mm	100/200	
25mm	100/200	
32mm	100/200	
63mm	100/200	

FABRICATED BENDS

BEND
90⁰ UPVC

Technical Details

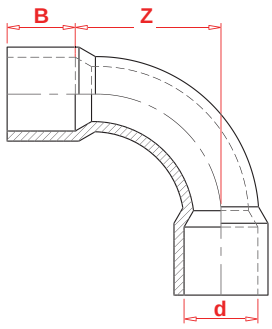

SIZE	d	B	Z
mm	mm	mm	mm
20	20	26	90
25	25	30	110
32	32	38	120
40	40	45	130
50	50	53	170
63	63	62	220
75	75	79	280
90	90	90	350
110	110	90	370

BEND

90⁰ CONDUIT

Technical Details

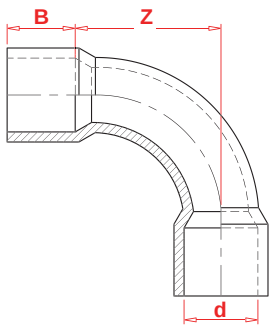

SIZE	d	B	Z
mm	mm	mm	mm
16	16	17	55
20	19	22	60
25	25	26	90
32	34	35	110
40	40	48	180
50	50	56	210

BEND
90⁰ CPVC

Technical Details

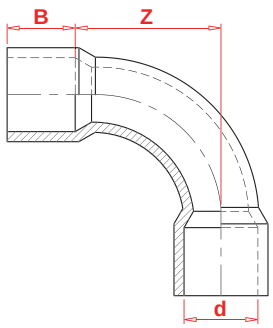

SIZE	d	B	Z
mm	mm	mm	mm
15	15.9	21	80
20	22.2	26	90
25	28.5	30	110
32	34.9	38	130
40	41.3	53	190
50	54	64	220

CPVC PIPES & FITTINGS

CPVC
PLUMBING SYSTEMS

PIPE
SDR-11

NOMINAL SIZE		OUTSIDE DIAMETER (IN.) (MM)		WALL THICKNESS (IN.) (MM)		PRESSURE RATING, PSI (KG/CM2)			
Inch.	mm	Average	Tolerance	Minimum	Tolerance	73.4°F	(23°C)	180°F	(82°C)
1/2	15	0.625 (15.9)	±0.003 (0.08)	0.068 (1.73)	+0.020 (0.51)	400	28.1	100	7
3/4	20	0.875 (22.2)	±0.003 (0.08)	0.080 (2.03)	+0.020 (0.51)	400	28.1	100	7
1	25	1.125 (28.6)	±0.003 (0.08)	0.102 (2.59)	+0.020 (0.51)	400	28.1	100	7
1 1/4	32	1.375 (34.9)	±0.003 (0.08)	0.125 (3.18)	+0.020 (0.51)	400	28.1	100	7
1 1/2	40	1.625 (41.3)	±0.004 (0.10)	0.148 (3.76)	+0.020 (0.51)	400	28.1	100	7
2	50	2.125 (54.0)	±0.004 (0.10)	0.193 (4.90)	+0.020 (0.58)	400	28.1	100	7

PIPE
SDR-13.5

NOMINAL SIZE		OUTSIDE DIAMETER (IN.) (MM)		WALL THICKNESS (IN.) (MM)		PRESSURE RATING, PSI (KG/CM2)			
Inch.	mm	Average	Tolerance	Minimum	Tolerance	73.4°F	(23°C)	180°F	(82°C)
1/2	15	0.625 (15.9)	±0.003 (0.08)	0.055 (1.40)	+0.020 (0.51)	320	22.5	80	5.6
3/4	20	0.875 (22.2)	±0.003 (0.08)	0.065 (1.65)	+0.020 (0.51)	320	22.5	80	5.6
1	25	1.125 (28.6)	±0.003 (0.08)	0.083 (2.12)	+0.020 (0.51)	320	22.5	80	5.6
1 1/4	32	1.375 (34.9)	±0.003 (0.08)	0.102 (2.59)	+0.020 (0.51)	320	22.5	80	5.6
1 1/2	40	1.625 (41.3)	±0.004 (0.10)	0.120 (3.06)	+0.020 (0.51)	320	22.5	80	5.6
2	50	2.125 (54.0)	±0.004 (0.10)	0.157 (4.00)	+0.023 (0.58)	320	22.5	80	5.6

PIPE

SCHEDULE 40

NOMINAL SIZE		OUTSIDE DIAMETER (IN.) (MM)		ID	WALL THICKNESS (IN.)(MM)		PRESSURE RATING, PSI (KG/CM2)	
Inch.	mm	Average	Tolerance	Average	Minimum	Tolerance	73.4°F	(23°C)
2 1/2	65	2.875 (73.0)	±0.007 (0.18)	2.444 (62.07)	0.203 (5.16)	+ 0.024 (0.61)	300	21.1
3	80	3.500 (88.9)	±0.008 (0.20)	3.041 (77.26)	0.216 (5.49)	+ 0.034 (0.86)	280	18.28
4	100	4.500(114.3)	±0.009 (0.23)	3.998 (101.55)	0.237 (6.02)	+ 0.034 (0.86)	220	15.47
6	150	6.625(168.3)	±0.011 (0.28)	6.032 (153.22)	0.280 (7.11)	+ 0.034 (0.86)	180	12.66
8	200	8.625(219.1)	±0.015 (0.38)	7.942 (201.72)	0.322 (8.18)	+ 0.039 (0.99)	160	11.25
10	250	10.750(273.1)	±0.015 (0.38)	9.976 (253.39)	0.365 (9.27)	+ 0.044 (1.12)	140	9.84
12	300	12.750(323.9)	±0.015 (0.38)	11.889 (301.98)	0.406(10.31)	+ 0.049 (1.24)	130	9.84

PIPE

SCHEDULE 80

NOMINAL SIZE		OUTSIDE DIAMETER (IN.) (MM)		ID	WALL THICKNESS (IN.)(MM)		PRESSURE RATING, PSI (KG/CM2)	
Inch.	mm	Average	Tolerance	Average	Minimum	Tolerance	73.4°F	(23°C)
2 1/2	65	2.875 (73.0)	±0.007 (0.18)	2.288 (58.14)	0.276 (7.01)	+ 0.033 (0.84)	420	29.53
3	80	3.500 (88.9)	±0.008 (0.20)	2.864 (72.75)	0.300 (7.62)	+ 0.036 (0.91)	370	26.01
4	100	4.500(114.3)	±0.009 (0.23)	3.778 (95.97)	0.337 (8.56)	+ 0.040 (1.02)	320	22.5
6	150	6.625(168.3)	±0.011 (0.28)	5.710 (145.04)	0.432 (10.97)	+ 0.052 (1.32)	280	19.69
8	200	8.625(219.1)	±0.015 (0.38)	7.565 (192.15)	0.500 (12.70)	+ 0.060 (1.52)	250	17.57
10	250	10.750(273.1)	±0.015 (0.38)	9.493 (241.12)	0.593 (15.06)	+ 0.071 (1.80)	230	16.17
12	300	12.750(323.9)	±0.015 (0.38)	11.249 (286.87)	0.682 (17.45)	+ 0.082 (2.08)	230	16.17

CPVC FITTINGS

CPVC
REDUCER BUSHING

Technical Details

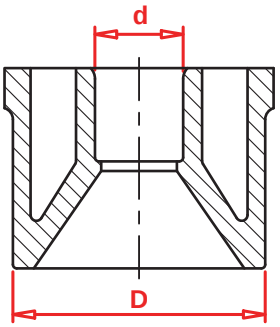

SIZE	
Inch. (Dxd)	mm (Dxd)
3/4 x 1/2	20x15
1 x 1/2	25x15
1 x 3/4	25x20
1 1/4 x 1/2	32x15
1 1/4 x 3/4	32x20
1 1/4 x 1	32x25
1 1/2 x 1/2	40x15
1 1/2 x 3/4	40x20
1 1/2 x 1	40x25
1 1/2 x 1 1/4	40x32
2 x 1/2	50x15
2 x 3/4	50x20
2 x 1	50x25
2 x 1 1/4	50x32
2 x1 1/2	50x40

CPVC
TRANSITION BUSHING

Technical Details

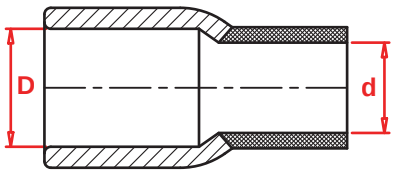

SIZE	
Inch. (Dxd)	mm (Dxd)
1/2 IPS X 1/2 CTS	15x15
3/4 IPS x 3/4 CTS	20x20
1 IPS x 1 CTS	25x25
1 1/4 IPS x 1 1/4 CTS	32x32
1 1/2 IPS x 1 1/2 CTS	40x40
2 IPS x 2 CTS	50x50

CPVC
COUPLING

Technical Details

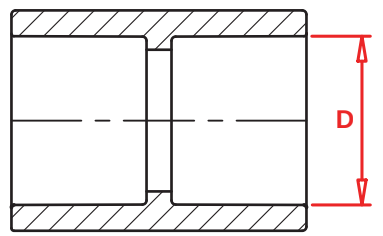

SIZE (D)	
Inch.	mm
1/2	15
3/4	20
1	25
1 1/4	32
1 1/2	40
2	50

CPVC
TRANSITION COUPLING

Technical Details

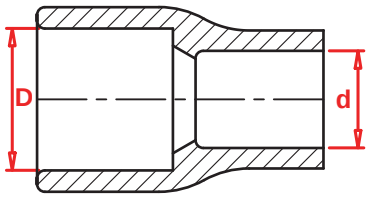

SIZE	
Inch. (Dxd)	mm (Dxd)
3/4 IPS x 3/4 CTS	20x20
1 IPS x 1 CTS	25x25

CPVC
REDUCER COUPLING

Technical Details

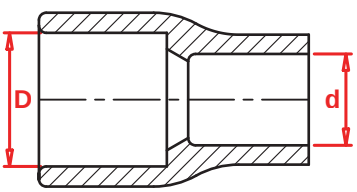

SIZE	
Inch. (Dxd)	mm (Dxd)
3/4 x 1/2	20x15
1 x 1/2	25x15
1 x 3/4	25x20
1 1/4 x 1	32x25
1 1/2 x 1 1/4	40x32
1 1/2 x 1	40x25
1 1/2 x 3/4	40x20
2 x 1 1/4	50x32
2 x 1	50x25
2 x 1/2	50x15

CPVC TEE

Technical Details

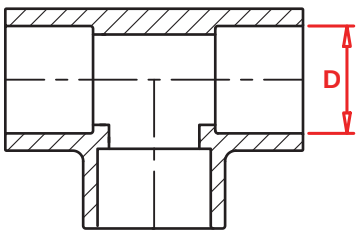

SIZE (D)	
Inch.	mm
1/2	15
3/4	20
1	25
1 1/4	32
1 1/2	40
2	50

CPVC
REDUCER
TEE

Technical Details

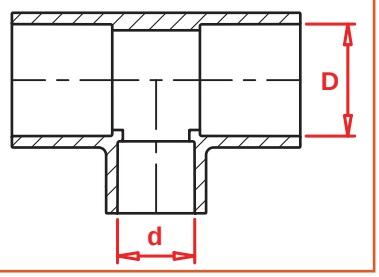

SIZE	
Inch. (Dxd)	mm (Dxd)
1/2 x 1/2 x 3/4	15x15x20
3/4 x 1/2	20x15
3/4 x 1/2 x 3/4	20x15x20
3/4 x 1/2 x 1/2	20x15x15
1 x 1 x 3/4	25x25x20
1 1/2 x 1 1/2 x 1	40x40x25
2 x 2 x 1	50x50x25
1 1/4 x 1/2	32x15
1 1/4 x 1	32x25
2 x 1/2	50x15
1 x 1/2	25x15

CPVC
ELBOW 90^0

Technical Details

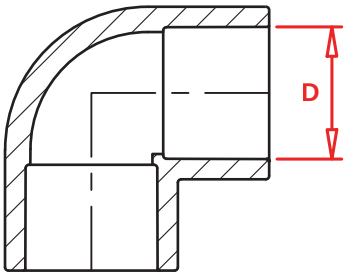

SIZE (D)	
Inch.	mm
1/2	15
3/4	20
1	25
1 1/4	32
1 1/2	40
2	50

CPVC
ELBOW 45^0

Technical Details

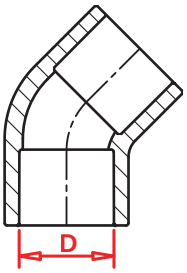

SIZE (D)	
Inch.	mm
1/2	15
3/4	20
1	25
1 1/4	32
1 1/2	40
2	50

Super RVC
(N. B. 20mm 3/4")
FLOWGUARD

CPVC MALE ADAPTER

Technical Details

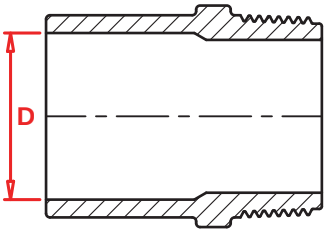

SIZE (D)	
Inch.	mm
1/2	15
3/4	20
1	25
1 1/4	32
1 1/2	40
2	50
3/4 Soc x 1/2 MIP	20 x 15

CPVC FEMALE ADAPTER

Technical Details

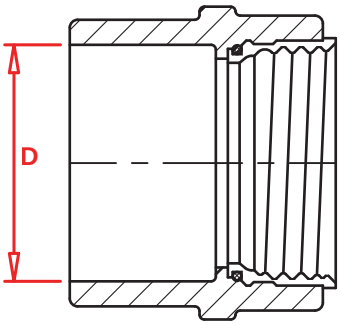

SIZE (D)	
Inch.	mm
1/2	15
3/4	20
1	25

CPVC TANK ADAPTER

Technical Details

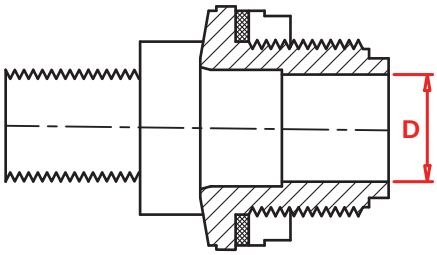

SIZE (D)	
Inch.	mm
1/2	15
3/4	20
1	25
1 1/4	32
1 1/2	40
2	50

CPVC UNION

Technical Details

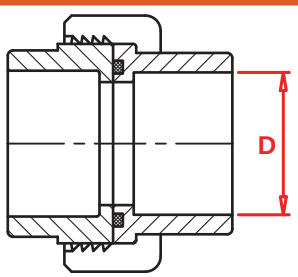

SIZE (D)	
Inch.	mm
1/2	15
3/4	20
1	25
1 1/4	32
1 1/2	40
2	50

CPVC
CAP

Technical Details

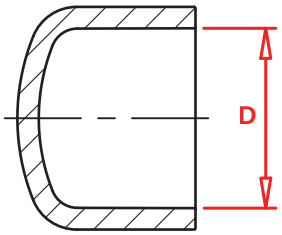

SIZE (D)	
Inch.	mm
1/2	15
3/4	20
1	25
1 1/4	32
1 1/2	40
2	50

CPVC
BRASS
COUPLING

Technical Details

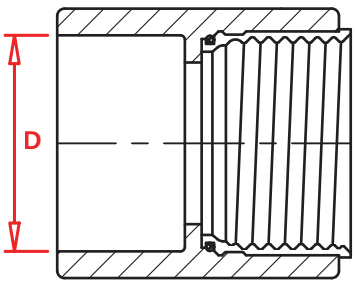

SIZE (D)	
Inch.	mm
3/4 x 1/2	20x15
1 x 1/2	25x15

CPVC
BRASS FPT
TEE

Technical Details

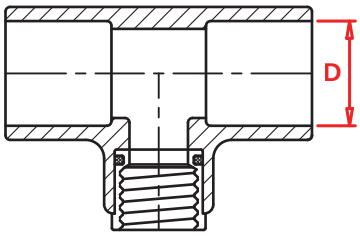

SIZE (D)	
Inch.	mm
1/2 x 1/2 x 1/2	15x15x15
3/4 x 3/4 x 1/2	20x20x15
3/4 x 3/4 x 3/4	20x20x20
1 x 1 x 1/2	25x25x15
1 1/4 x 1 1/4 x 1 1/4	32x32x32
1 1/4 x 1 1/4 x 1 1/2	32x32x15

CPVC
BRASS FPT
ELBOW 90^0

Technical Details

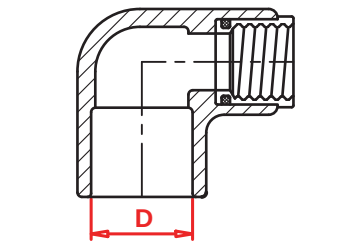

SIZE (D)	
Inch.	mm
1/2x1/2	15x15
3/4x1/2	20x15
3/4x3/4	20x20
1 xYz	25x15
1 X 1	25x25
1/ 1/4Xl^1/4	32x32

CPVC
BRASS MALE ADAPTER

Technical Details

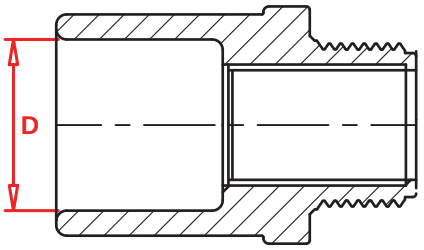

SIZE (D)	
Inch.	mm
1/2	15
3/4	20
1	25
1 1/4	32
1 1/2	40
3/4 x 1/2	20x15

CPVC
BRASS FEMALE ADAPTER

Technical Details

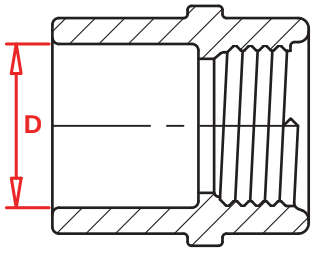

SIZE (D)	
Inch.	mm
1/2	15
3/4	20
1	25
1 1/4	32
1 1/2	40
2	50

CPVC
CONCEALED
VALVE

Technical Details

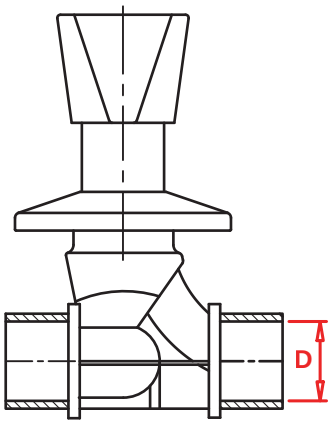

SIZE (D)	
Inch.	mm
1/2	15
3/4	20

CPVC
STEP OVER
BEND

Technical Details

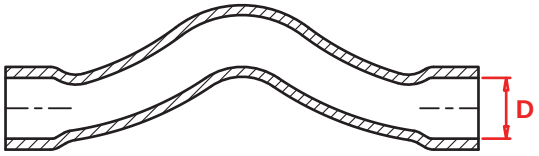

SIZE (D)	
Inch.	mm
1/2	15
3/4	20

CPVC BALL VALVE

Technical Details

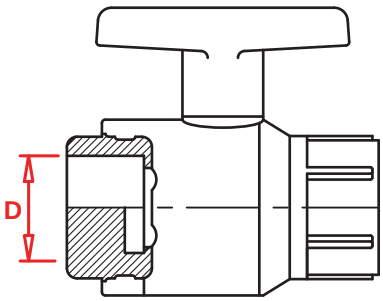

SIZE (D)	
Inch.	mm
1/2	15
3/4	20
1	25
1 1/4	32
1 1/2	40
2	50

HDPE PIPES & FITTINGS

PE PIPE

Nominal Diameter (mm)	Mean Outside Diameter (mm)		Out of roundness (mm)/max.	Wall Thickness (mm)			
				For PNT 8.5/SDR 17/PN10		For PNT 13.5/SDR 11/PN16	
	Min.	Max.		Min.	Max.	Min.	Max.
20	20.0	20.3	1.2	-	-	2.0	2.3
25	25.0	25.3	1.2	-	-	2.3	2.7
32	32.0	32.3	1.3	2.0	2.3	3.0	3.4
40	40.0	40.4	1.4	2.4	2.8	3.7	4.2
50	50.0	50.4	1.4	3.0	3.4	4.6	5.2
63	63.0	63.4	1.5	3.8	4.3	5.8	6.5
75	75.0	75.5	1.6	4.5	5.1	6.8	7.6
90	90.0	90.6	1.8	5.4	6.1	8.2	9.2
110	110.0	110.7	2.2	6.6	7.4	10.0	11.1

FABRICATED (BUTT FUSED) TEE

Nominal Size Φ D	H	L
50	150	300
63	150	300
75	400	800
90	400	800
110	400	800
125	400	800
140	400	800
160	400	800
180	450	900
200	450	900
225	450	900
250	450	900
280	650	1300
315	650	1300
355	650	1300
400	650	1300
450	850	1700
500	850	1700

Technical Details

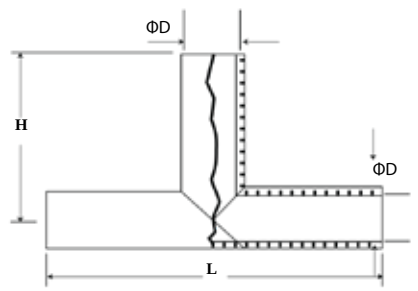

FABRICATED (BUTT FUSED)

90° BEND-5 PIECES

Nominal Size Φ D	R	A	C
50	75	40	220
63	95	51	280
75	113	61	330
90	135	72	400
110	165	88	370
125	188	101	400
140	210	113	430
160	240	130	470
180	270	145	510
200	300	161	550
225	338	181	600
250	375	201	650
280	420	225	710
315	472	253	620
355	532	285	680
400	600	322	760
450	675	362	1300
500	750	402	1400

Technical Details

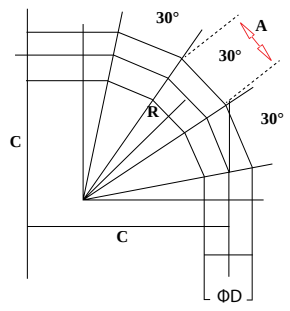

FABRICATED (BUTT FUSED)

90° BEND-3 PIECES

Nominal Size Φ D	Z	R	B
20	-	-	-
25	-	-	-
32	-	-	-
40	-	-	-
50	200	75	100
63	226	95	100
75	250	113	100
90	330	135	150
110	370	165	150
125	400	188	150
140	430	210	150
160	470	240	150
180	510	270	150
200	550	300	150
225	600	338	150
250	750	375	250
280	810	420	250
315	930	472	300
355	1010	532	300
400	1100	600	300
450	1300	675	400
500	1400	750	400

Technical Details

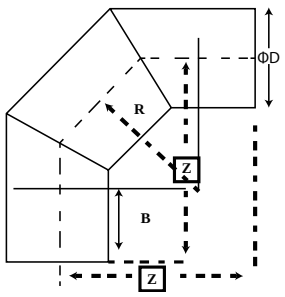

CROSS FITTING

Technical Details

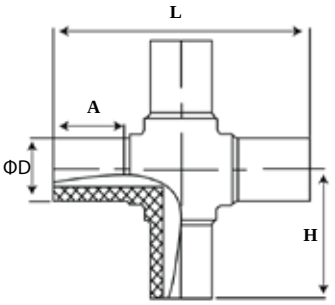

Nominal Size Φ D	L	A	H
63	230	63	115
90	295	79	147
110	380	82	190
160	430	98	215
200	420	90	210
250	500	110	250
315	615	130	307
355	660	130	330

EQUAL TEE

Nominal Size ΦD1xΦD2xΦD3	L	A	B	H
50 X 50 X 50	170	55	55	82
63 X 63 X 63	200	63	63	104
75 X 75 X 75	230	70	70	114
90 X 90 X 90	260	79	79	133
110 X 110 X 110	290	82	82	145
125 X 125 X 125	315	87	87	160
140 X 140 X 140	345	9292	92	170
160 X 160 X 160	325	75	75	170
180 X 180 X 180	420	105	105	225
200 X 200 X 200	377	75	84	200
225 X 225 X 225	484	120	120	230
250 X 250 X 250	517	120	120	265
280 X 280 X 280	590	140	140	300
315 X 315 X 315	615	130	125	310
355 X 355 X 355	630	120	120	350
400 X 400 X 400	670	120	120	360

Technical Details

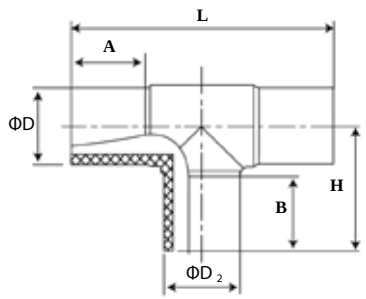

END CAP

Nominal Size ΦD	R	A
20	45	41
25	46	41
32	51	45
40	87	67
50	90	66
63	77	63
75	84	70
90	92	79
110	97	82
125	112	87
160	119	98
180	145	110
200	147	112
225	155	118
250	186	128
315	190	150
355	215	155
400	220	160
500	240	190

Technical Details

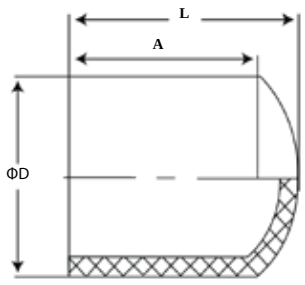

BUTT
FUSION MALE ADAPTER

Nominal Size
20 X 1/2” M
25 X 3/4” M
32 X 1” M
40 X 1 ¼” M
50 X 1 ½” M
63 X 2” M
90 X 3” M

BUTT
FUSION FEMALE ADAPTER

Nominal Size
20 X 1/2” F
25 X 3/4” F
32 X 1” F
40 X 1 ¼” F
50 X 1 ½” F
63 X 2” F
90 X 3” F

REDUSING TEE

Technical Details

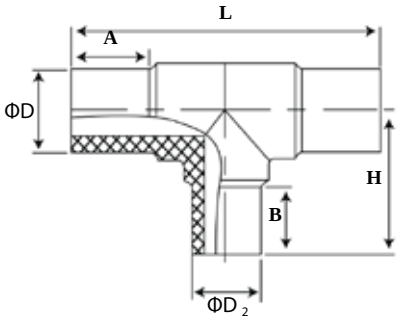

Nominal Size Φ D1 X Φ D2 XΦ D1	L	A	B	H
50 X 32 X 50	165	55	55	81
63 X 25 X 63	168	63	45	85
63 X 32 X 63	172	63	45	87
63 X 40 X 63	180	63	50	93
63 X 50 X 63	190	63	55	96
75 X 32 X 75	180	70	39	90
75 X 40 X 75	205	70	45	93
75 X 50 X 75	205	70	55	100
75 X 63 X 75	225	70	63	107
90 X 32 X 90	216	79	45	105
90 X 40 X 90	220	79	50	108
90 X 50 X 90	230	79	55	110
90 X 63 X 90	245	79	63	110
90 X 75 X 90	252	79	70	126
110 X 32 X 110	220	82	50	115
110 X 40 X 110	238	82	50	119
110 X 50 X 110	250	82	55	123
110 X 63 X 110	264	82	63	118

Nominal Size Φ D1 X Φ D2 XΦ D1	L	A	B	H
110 X 75 X 110	284	82	70	137
110 X 90 X 110	275	82	79	135
125 X 63 X 125	320	87	63	143
125 X 75 X 125	314	87	70	152
125 X 90 X 125	309	87	79	151
125 X 110 X 125	318	87	82	160
140 X 110 X 140	315	92	82	164
140 X125 X 140	330	92	87	167
160 X 63 X 160	275	98	63	153
160 X 75 X 160	287	98	70	167
160 X 90 X 160	300	98	79	175
160 X 110 X 160	325	98	82	175
160 X 125 X 160	335	98	87	181
160 X 140 X 160	345	98	92	186
180 X 90 X 180	338	105	79	181
180 X 110 X 180	355	105	82	187
180 X 125 X 180	365	105	87	191
180 X 140 X 180	380	105	92	196
180 X 160 X 180	400	105	98	202
200 X 63 X 200	305	112	63	176
200 X 75 X 200	310	112	70	183
200 X 90 X 200	330	112	79	191
200 X 110 X 200	355	112	82	196
200 X 125 X 200	370	112	87	201
200 X 160 X 200	420	112	98	207

Nominal Size Φ D1 X Φ D2 XΦ D1	L	A	B	H
225 X 90 X 225	345	120	79	207
225 X 110 X 225	365	120	82	212
225 X 160 X 225	417	120	98	212
225 X 180 X 225	433	95	86	209
250 X 90 X 250	395	129	79	218
250 X 110 X 250	395	129	82	216
250 X 125 X 250	410	129	87	221
250 X 160 X250	398	95	81	218
250 X 180 X 250	460	129	105	245
250 X 200 X 250	379	75	112	254
280 X 90 X 280	410	140	79	235
280 X 110 X 280	430	140	82	238
280 X X160 X 280	480	140	98	254
280 X 200 X 280	520	140	112	268

Nominal Size Φ D1 X Φ D2 XΦ D1	L	A	B	H
280 X 225 X 280	545	140	122	278
280 X 250 X 280	570	140	129	285
315 X 90 X 315	420	150	79	255
315 X 110 X 315	442	150	82	255
315 X 160 X 315	450	130	77	247
315 X 180 X 315	503	150	105	291
315 X 200 X 315	455	110	95	285
315 X 225 X 315	550	150	120	292
315 X 250 X 315	460	80	80	248
355 X 250 X 355	620	120	120	290
355 X 315 X 355	620	120	120	290
400 X 200 X 400	670	130	150	380
400 X 315 X 400	670	130	150	380
400 X 355 X 400	670	130	150	380

REDUCER

Technical Details

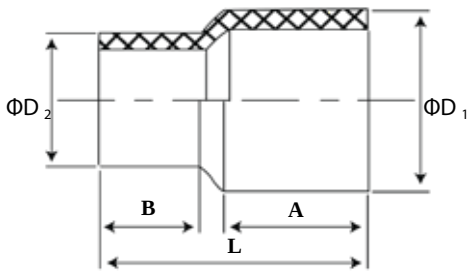

Nominal Size Φ D1 X Φ D2	L	A	B
63 X 25	139	63	55
63 X 32	147	63	55
63 X 40	141	63	55
63 X 50	150	63	55
75 X 32	149	70	55
75 X 50	143	70	55
75 X 63	150	70	63
90 X 32	163	79	55
90 X 40	162	79	55
90 X 50	161	79	55
90 X 63	168	79	63
90 X 75	169	79	70
110 X 40	169	82	55
110 X 50	166	82	55
110 X 63	173	82	63
110 X 75	181	82	70
110 X 90	177	82	79
125 X 63	189	87	63
125 X 90	183	87	79
125 X 110	185	87	82
140 X 90	224	92	79

Nominal Size Φ D1 X Φ D2	L	A	B
63 X 25	139	63	55
63 X 32	147	63	55
63 X 40	141	63	55
63 X 50	150	63	55
75 X 32	149	70	55
75 X 50	143	70	55
75 X 63	150	70	63
90 X 32	163	79	55
90 X 40	162	79	55
90 X 50	161	79	55
90 X 63	168	79	63
90 X 75	169	79	70
110 X 40	169	82	55
110 X 50	166	82	55
110 X 63	173	82	63
110 X 75	181	82	70
110 X 90	177	82	79
125 X 63	189	87	63
125 X 90	183	87	79
125 X 110	185	87	82
140 X 90	224	92	79
250 X 125	109	109	87
250 X 160	110	110	98
250 X 180	110	110	105
250 X 200	110	110	103

Nominal Size Φ D1 X Φ D2	L	A	B
250 X 225	105	105	90
280 X 160	107	107	85
280 X 225	110	110	85
280 X 250	110	110	90
315 X 90	115	115	79
315 X 110	115	115	82
315 X 160	115	115	98
315 X 180	253	115	100
315 X 200	253	115	92
315 X 225	245	115	90
315 X 250	246	115	90
355 X 200	270	100	100
355 X 250	270	100	100

Nominal Size Φ D1 X Φ D2	L	A	B
355 X 280	260	100	100
355 X 315	240	100	100
400 X 200	260	100	100
400 X 250	250	100	100
400 X 315	250	100	100
400 X 355	250	100	100
450 X 200	260	100	100
450 X 250	260	100	100
450 X 315	250	100	100
450 X 355	250	100	100
450 X 400	240	100	100
500 X 400	250	100	100
500 X 450	250	100	100

ELBOW 90°

Nominal Size Φ D X 90°	R (MM)	A
50 X 90°	120	55
63 X 90°	133	63
75 X 90°	163	70
90 X 90°	182	79
110 X 90°	214	82
125 X 90°	240	87
140 X 90°	244	88
160 X 90°	258	80
180 X 90°	297	97
200 X 90°	308	97
225 X 90°	367	115
250 X 90°	362	100
280 X 90°	433	130
315 X 90°	460	125
355 X 90°	540	150
400 X 90°	600	180

Technical Details

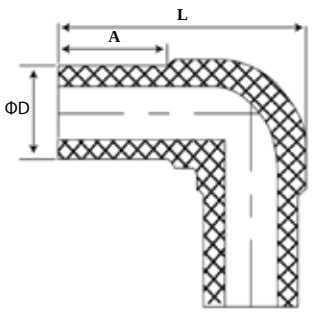

ELBOW 45°

Nominal Size Φ D X 45°	L	A	B
63 X 45°	160	63	79
75 X 45°	180	70	89
90 X 45°	228	79	114
110 X 45°	246	82	118
125 X 45°	248	87	115
160 X 45°	310	98	138
180 X 45°	340	100	159
200 X 45°	355	112	167
225 X 45°	398	120	173
250 X 45°	420	129	192
315 X 45°	510	150	220

Technical Details

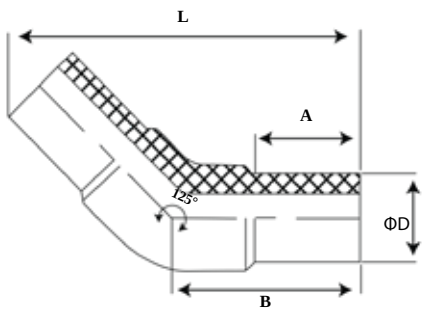

STEPPED REDUCER

Nominal Size
180/160/125/110/90
315/250/200/180/160
400/355/315/250/200/180

FLANGE ADAPTER (STUB END)

Nominal Size Φ D	Φ D1	L	A	B
20	44	83	62	7
25	44	83	61	8
32	67	83	62	10
40	77	78	61	12
50	87	88	71	12
63	101	88	70	12
75	121	94	75	13
90	137	98	76	18
110	158	106	81	18
125	158	130	103	21
140	187	128	99	22
160	212	135	104	26
180	212	137	101	29
200	268	154	113	34
225	267	144	108	29
250	320	156	120	29
280	323	168	128	35
315	370	173	133	33
355	432	173	132	33
400	482	182	132	32
450	525	185	129	47
500	580	211	144	47

Technical Details

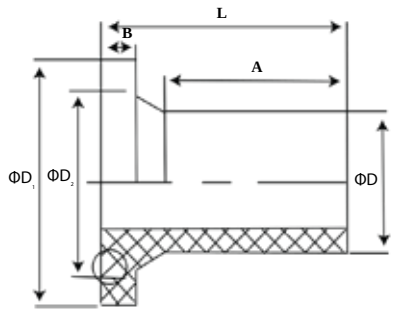

EQUAL COUPLING

Nominal Size
20
25
32
40
50
63
75

EQUAL TEE

Nominal Size
20
25
32
40
50
63
75

REDUCING TEE

Nominal Size
25 X 20
32 X 20
32 X 25
40 X 20
40 X 25
40 X 32
50 X 20
50 X 25
50 X 32
50 X 40
63 X 20
63 X 25
63 X 32
63 X 40
63 X 50
75 X 40
75 X 50
75 X 63

90° EQUAL ELBOW

Nominal Size
20
25
32
40
50
63
75

45° EQUAL ELBOW

Nominal Size
20
25
32
40
50
63
75

SOCKET WASHER

Nominal Size
40
50
63

END CAP

Nominal Size
20
25
32
40
50
63
75

FEMALE ADAPTER

Nominal Size
20 X 1/2” F
25 X 1/2” F
25 X 3/4” F
32 X 1” F
32 X 1/2” F
32 X 3/4” F
40 X 1 ¼” F
50 X 1 ½” F
63 X 2” F

MALE ADAPTER

Nominal Size
20 X 1/2” M
25 X 1/2” M
25 X 3/4” M
32 X 1” M
32 X 1/2” M
32 X 3/4” M
40 X 1 ¼” M
50 X 1 ½” M
63 X 2” M

FEMALE TEE

Nominal Size
20 X 1/2” F
25 X 1/2” F
25 X 3/4” F
32 X 1” F
32 X 1/2” F
32 X 3/4” F

MALE TEE

Nominal Size
20 X 1/2” M
25 X 1/2” M
25 X 3/4” M
32 X 1” M
32 X 1/2” M
32 X 3/4” M

FEMALE ELBOW

Nominal Size
20 X 1/2” F
25 X 1/2” F
25 X 3/4” F
32 X 1” F
32 X 1/2” F
32 X 3/4” F

MALE ELBOW

Nominal Size
20 X 1/2” M
25 X 1/2” M
25 X 3/4” M
32 X 1” M
32 X 1/2” M
32 X 3/4” M

FEMALE UNION

Nominal Size
20 X 1/2” F
25 X 3/4” F
32 X 1” F
40 X 1 F
50 X 1 F
63 X 2” F

MALE UNION

Nominal Size
20 X 1/2” M
25 X 3/4” M
32 X 1” M
40 X 1 1/4” M
50 X 1 1/2” M
63 X 2” M

STOP VALVE

Nominal Size
20
25
32
40
50
63
75

ELECTROFUSION
COUPLER

Nominal Size Φ D	L	A	Φ d
20	85	40	4.7
25	90	43	4.7
32	90	44	4.7
40	95	45	4.7
50	105	50	4.7
63	110	50	4.7
75	135	65	4.7
90	130	63	4.7
110	150	70	4.7
125	165	80	4.7
140	170	80	4.7
160	180	85	4.7
180	210	100	4.7
200	205	100	4.7
225	220	105	4.7
250	215	105	4.7
315	225	110	4.7
355	265	130	4.7
400	310	150	4.7
500	370	180	4.7

Technical Details

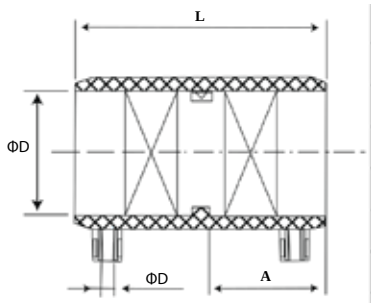

ELECTROFUSION
ELBOW 45^0

Technical Details

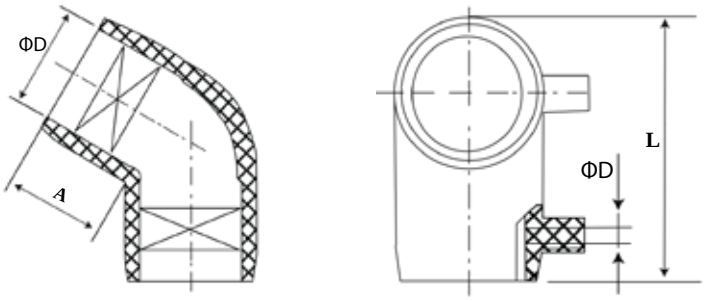

Nominal Size Φ D	L	A	Φ d
50 X 45^0	130	50	4.7
63 X 45^0	180	63	4.7
90 X 45^0	230	83	4.7
110 X 45^0	270	90	4.7
160 X 45^0	280	85	4.7
200 X 45^0	330	100	4.7
250 X 45^0	420	115	4.7
315 X 45^0	470	130	4.7
400 X 45^0	580	140	4.7

ELECTROFUSION
ELBOW 90^0

Nominal Size Φ D	L	A	Φ d
25 X 900	85	45	4.7
32 X 900	95	45	4.7
40 X 900	95	50	4.7
50 X 900	110	50	4.7
63 X 900	130	55	4.7
75 X 900	155	60	4.7
90 X 900	170	65	4.7
110 X 900	195	70	4.7
125 X 900	225	80	4.7
160 X 900	265	80	4.7
180 X 900	295	85	4.7
200 X 900	330	102	4.7
250 X 900	395	113	4.7
315 X 900	485	129	4.7
400 X 900	590	140	4.7

Technical Details

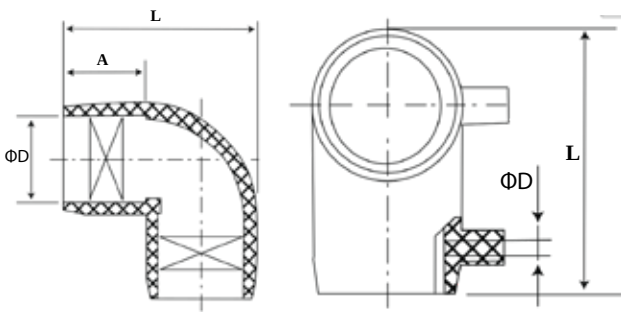

ELECTROFUSION
REDUCER

Technical Details

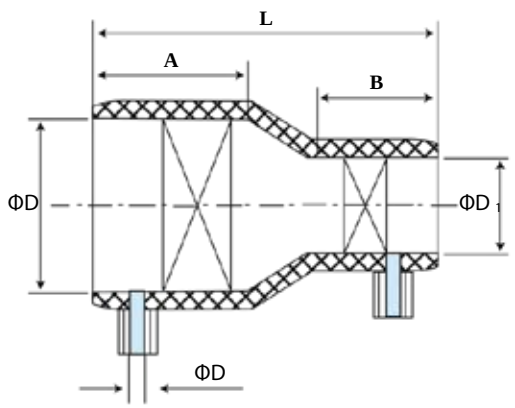

Nominal Size Φ D	L	A	B	Φ d
25 X 20	95	45	35	4.7
32 X 20	95	45	45	4.7
32 X 25	95	40	45	4.7
40 X 25	100	50	40	4.7
40 X 32	100	50	40	4.7
50 X 25	110	55	40	4.7
50 X 32	110	55	40	4.7
50 X 40	110	50	50	4.7
63 X 25	115	60	40	4.7
63 X 32	120	60	40	4.7
63 X 40	120	55	40	4.7
63 X 50	120	55	50	4.7
75 X 50	120	65	50	4.7
75 X 63	130	65	50	4.7
90 X 50	140	65	55	4.7
90 X 63	140	65	55	4.7
90 X 75	145	65	60	4.7
110 X 63	160	75	55	4.7
110 X 75	155	75	60	4.7
110 X 90	155	75	65	4.7
125 X 63	160	80	60	4.7
125 X 90	160	80	70	4.7
125 X 110	165	85	69	4.7
160 X 90	195	94	74	4.7
160 X 110	165	95	75	4.7
160 X 125	195	95	75	4.7
200 X 110	210	95	80	4.7
200 X 160	210	95	85	4.7
250 X 110	230	100	80	4.7
250 X 160	230	110	90	4.7
250 X 200	230	110	100	4.7
315 X 200	240	100	100	4.7
315 X 250	240	100	100	4.7
400 X 250	260	110	105	4.7
400 X 315	260	110	105	4.7

ELECTROFUSION
REDUCING TEE

Technical Details

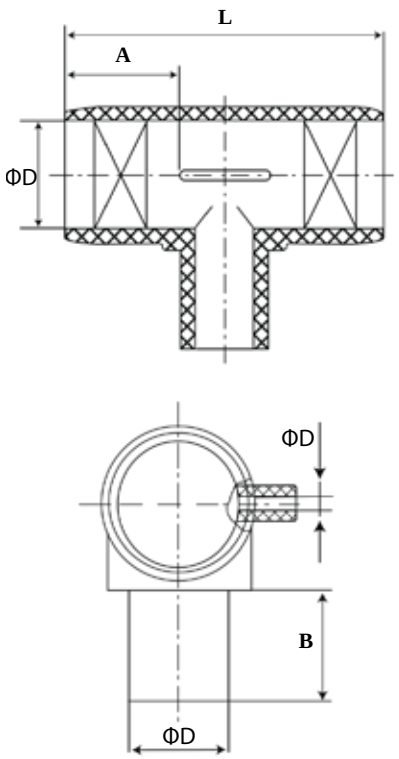

Nominal Size Φ D	L	A	B	Φ d
25 X 20 X 25	105	45	50	4.7
32 X 20 X 32	120	45	50	4.7
32 X 25 X32	120	45	50	4.7
40 X 25 X 40	125	45	55	4.7
40 X 32 X 40	125	45	55	4.7
50 X 25 X 50	145	50	50	4.7
50 X 32 X 50	144	50	55	4.7
50 X 40 X 50	145	55	55	4.7
63 X 25 X 63	130	55	55	4.7
63 X 32 X 63	136	50	55	4.7
63 X 40 X 63	143	50	55	4.7
63 X 50 X 63	164	55	55	4.7
75 X 32 X 75	195	70	70	4.7
75 X 40 X 75	195	70	70	4.7
75 X 50 X 75	195	70	70	4.7
75 X 63 X 75	195	70	65	4.7
90 X 32 X 90	210	70	80	4.7
90 X 40 X 90	210	70	80	4.7
90 X 50 X 90	210	70	80	4.7
90 X 63 X 90	210	70	80	4.7
90 X 75 X 90	210	70	75	4.7
110 X 32 X 110	240	75	80	4.7
110 X 40 X 110	240	75	80	4.7
110 X 50 X 110	240	75	80	4.7
110 X 63 X 110	240	75	80	4.7
110 X 75 X 110	240	75	80	4.7
110 X 90 X 110	240	75	80	4.7
125 X 90 X 125	255	80	85	4.7
125 X 110 X 125	255	80	85	4.7
160 X 63 X 160	305	90	90	4.7
160 X 75 X 160	305	90	90	4.7
160 X 90 X 160	305	90	90	4.7
160 X 110 X 160	305	90	90	4.7
160 X 125 X 160	305	90	80	4.7
200 X 90 X 200	355	100	75	4.7

Nominal Size Φ D	L	A	B	Φ d
200 X 110 X 200	355	100	75	4.7
200 X 160 X 200	355	100	90	4.7
250 X 110 X 150	405	100	95	4.7
250 X 160 X 150	405	100	110	4.7
250 X 200 X 150	405	100	110	4.7
315 X 110 X 315	520	125	95	4.7
315 X 160 X 315	520	125	95	4.7

Nominal Size Φ D	L	A	B	Φ d
315 X 200 X 315	520	125	110	4.7
315 X 250 X 315	520	125	110	4.7
400 X 110 X 400	600	125	115	4.7
400 X 160 X 400	600	125	115	4.7
400 X 200 X 400	600	125	115	4.7
400 X 250 X 400	600	125	115	4.7
400 X 315 X 400	600	125	115	4.7

ELECTROFUSION
EQUAL TEE

Technical Details

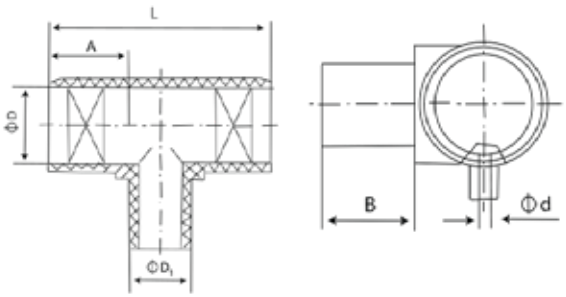

Nominal Size Φ D	L	A	B	Φ d
20 X 20 X 20	100	40	50	4.7
25 X 25 X 25	105	45	50	4.7
32 X 32 X 32	120	45	55	4.7
40 X 40 X 40	125	45	60	4.7
50 X 50 X 50	145	55	60	4.7
63 X 63 X 63	165	55	60	4.7
75 X 75 X 75	195	70	70	4.7
90 X 90 X 90	210	65	75	4.7
110 X 110 X 110	240	75	80	4.7
125 X 125 X 125	255	80	85	4.7
160 X 160 X 160	310	90	95	4.7
180 X 180 X 180	340	100	95	4.7
200 X 200 X 200	360	100	105	4.7
250 X 250 X 250	410	100	115	4.7
315 X 315 X 315	520	125	115	4.7
400 X 400 X 400	600	125	115	4.7

SYPHON POT

Technical Details

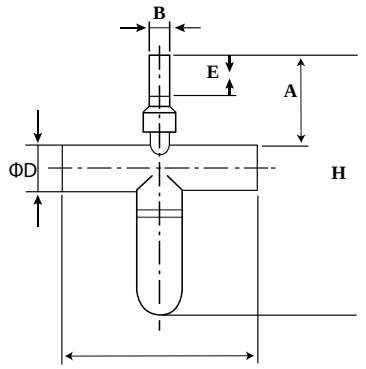

Nominal Size Φ D	L	A	B	E	H
63	230	32		95	600
90	280	32		95	700
110	380	32		95	770
160	430	32		95	770
200	420	32		95	700
250	520	32		95	780
315	620	32		95	890

ELECTROFUSION
END CUP

Technical Details

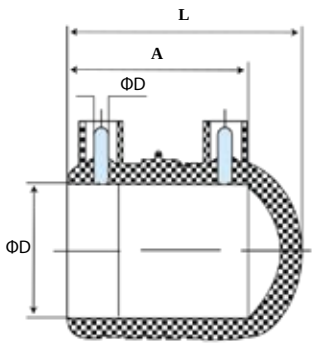

Nominal Size Φ D	L	A	Φ d
32	60	45	4.7
40	70	55	4.7
50	70	55	4.7
63	80	55	4.7
90	95	55	4.7
110	110	70	4.7

ELECTROFUSION REPAIR SADDLE

Technical Details

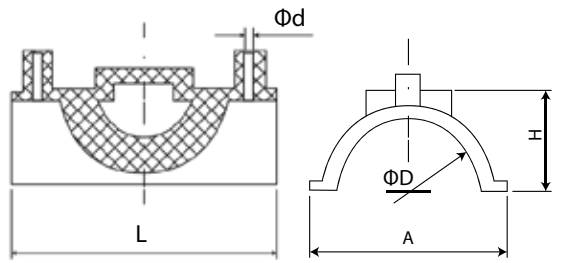

Nominal Size Φ D	L	A	H	Φ d
90	145	154	68	4.7
110	145	160	60	4.7
160	190	230	78	4.7
200	190	235	90	4.7
250	190	300	65	4.7
315	190	300	75	4.7

ELECTROFUSION
BRANCH SADDLE

Technical Details

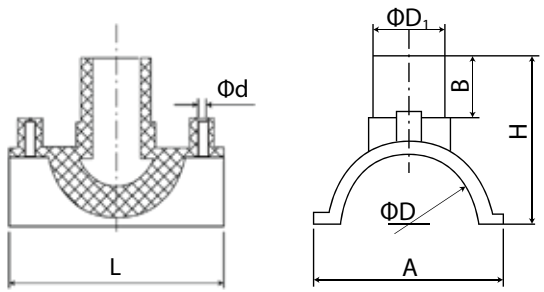

Nominal Size Φ D X Φ D1	L	A	B	H	Φ D
90 X 63	145	155	80	145	4.7
110 X 63	145	160	80	145	4.7
160 X 63	190	230	100	185	4.7
160 X 90	190	230	100	185	4.7
200 X 63	190	235	110	185	4.7
200 X 90	190	235	115	195	4.7
250 X 63	190	300	115	195	4.7
250 X 90	190	300	115	195	4.7
315 X 63	190	300	115	195	4.7
315 X 90	190	300	120	200	4.7

ELECTROFUSION TAPPING SADDLE

Technical Details

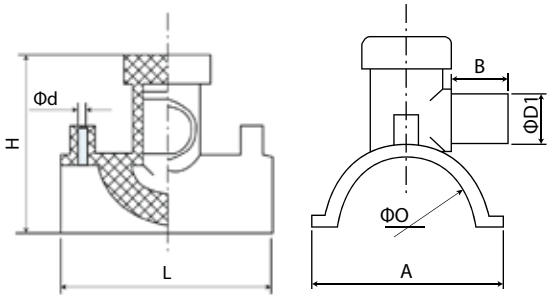

Nominal Size Φ D X Φ D1	L	A	B	H	Φ D
90 X 63	140	130	75	185	4.7
110 X 20	130	155	55	145	4.7
110 X 25	130	155	55	145	4.7
110 X 32	130	155	55	145	4.7
110 X 63	145	160	75	175	4.7
160 X 63	190	240	85	225	4.7
160 X 90	190	240	160	225	4.7
200 X 63	190	255	85	215	4.7
200 X 90	190	255	160	215	4.7
250 X 63	190	265	85	215	4.7
250 X 90	190	265	160	215	4.7
315 X 63	190	310	85	240	4.7
315 X 90	190	310	160	240	4.7

ELECTROFUSION FLANGE ADAPTER

Technical Details

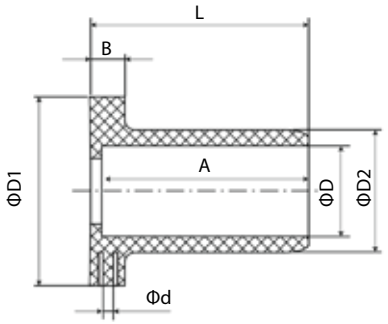

Nominal Size Φ D	Φ D1	Φ D2	B	H	B	H	Φ D
50	89	66	116	110	17	4.7	4.7
63	102	81	120	115	18	4.7	4.7
75	121	96	130	125	20	4.7	4.7
90	139	111	145	140	23	4.7	4.7
110	174	144	150	145	25	4.7	4.7
160	229	193	160	152	28	4.7	4.7
200	289	235	179	174	30	4.7	4.7
250	340	285	135	128	32	4.7	4.7
315	395	350	138	130	33	4.7	4.7
400	510	430	160	153	33	4.7	4.7

ELECTROFUSION
SYPHON COUPLER

Nominal Size							
50	56	110	125	160	200	250	315

ELECTROFUSION TAPPING SADDLE

Technical Details

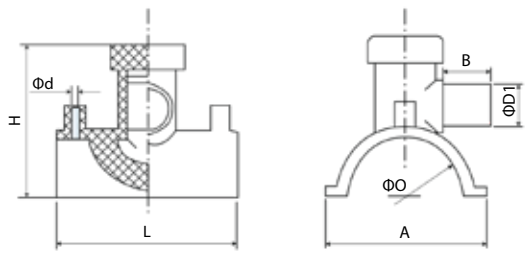

Nominal Size		PE Φ D1	STEEL L Φ D2	L	A	B	INCH	PLASTIC PATH
Nominal	Commonly Known as							
25 X 3/4”	25 P	25	27	375	80	230	3/4”	20
32 X 3/4”	32 P	32	27	375	80	230	3/4”	20
32 X 1”	32 P	32	34	375	80	230	1”	25
40 X 1”	40 P	40	34	375	80	230	1”	25
40 X 11/4”	40 P	40	42	375	80	230	11/4”	32
50 X 11/2”	50 P	50	48	375	80	230	11/2”	40
63 X 11/2”	63 P	63	48	375	80	230	11/2”	40
63 X 2”	63 P	53	57	375	80	230	2”	50
63 X 2”	63 P	63	60	375	80	230	2”	50
75 X 21/2”	75 P	75	76	570	80	370	21/2”	63
90 X 21/2”	90 P	90	76	570	100	370	21/2”	63
90 X 3”	90 P	90	89	570	100	370	3”	80
110 X 3”	110 P	110	89	570	100	370	3”	80
110 X 4”	110 P	110	108	570	100	370	4”	100
160 X 6”	160 P	160	159	560	160	310	6”	150
200	200 P	200	203	580	150	330	-	-
200	200 P	200	219	580	150	330	-	

PE / STEEL TRANSITION PIPE

Technical Details

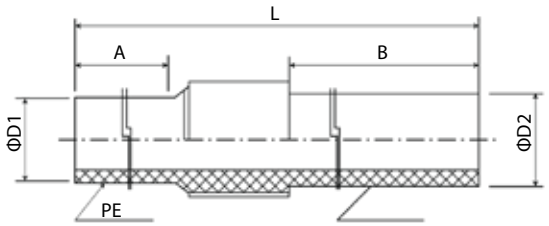

Size		PE Φ D1	STEEL L Φ D2	L	A	B	INCH	PLASTIC PATH
Nominal	Commonly Known as							
25 X 3/4”	25 P	25	27	375	80	230	3/4”	20
32 X 3/4”	32 P	32	27	375	80	230	3/4”	20
32 X 1”	32 P	32	34	375	80	230	1”	25
40 X 1”	40 P	40	34	375	80	230	1”	25
40 X 11/4”	40 P	40	42	375	80	230	11/4”	32
50 X 11/2”	50 P	50	48	375	80	230	11/2”	40
63 X 11/2”	63 P	63	48	375	80	230	11/2”	40
63 X 2”	63 P	53	57	375	80	230	2”	50
63 X 2”	63 P	63	60	375	80	230	2”	50
75 X 21/2”	75 P	75	76	570	80	370	21/2”	63
90 X 21/2”	90 P	90	76	570	100	370	21/2”	63
90 X 3”	90 P	90	89	570	100	370	3”	80
110 X 3”	110 P	110	89	570	100	370	3”	80
110 X 4”	110 P	110	108	570	100	370	4”	100
160 X 6”	160 P	160	159	560	160	310	6”	150
200	200 P	200	203	580	150	330	-	-
200	200 P	200	219	580	150	330	-	-
250	250 P	250	245	650	180	360	-	-
250	250 P	250	273	650	180	360	-	-
315	315 P	315	299	650	210	350	-	-
315	315 P	315	325	650	190	460	-	-

PE / STEEL TRANSITION THREADED

Technical Details

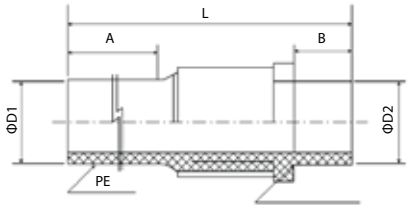

Nominal	Commonly Known as	PE Φ D1	TUBE TEETH Φ D2	L	A	B	INCH
32X1''	32 T	32	1 INCH 11 TEETH	17	80	25	1''
40X1 ¼''	40 T	40		01	80	25	1 ¼''
50X1 ½''	50 T	50		17	80	25	1 ½''
63X2''	63 T	63		01	80	25	2''

PE / STEEL TRANSITION THREADED

Nominal Size	
Nominal	Commonly Known as
25 X 3/4"	25 P
32 X 3/4"	32 P
32 X 1"	32 P
40 X 1"	40 P
40 X 1 ½"	40 P
50 X 1 ½"	50 P
63 X 1 ½"	63 P
63 X 2"	63 P

PE / STEEL
TRANSITION
PIPE ELBOW

Technical Details

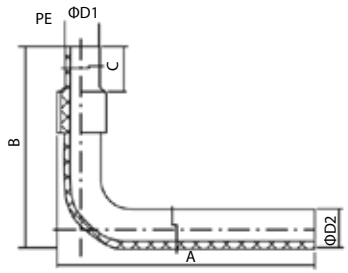

Size		PE Φ D1	PIPE Φ D2	A	B	C	INCH	Plastic Path
Nominal	Commonly Known as							
25X ¾”	25 P	25	27	740	410	80	3/4”	20
32X1”	32 P	32	34	740	410	80	1”	25
40X1”	40 P	40	34	740	410	80	1”	25
40X1 ¼”	40 P	40	42	740	410	80	1 ¼”	32
50X1 ½”	50 P	50	48	740	410	80	1 ½”	40
63X1 ½”	63 P	63	48	740	430	80	1 ½”	40
63X2”	63 P	63	57	740	430	80	2”	50
63X2”	63 P	63	60	740	430	80	2”	53

PE BALL VALVES

Technical Details

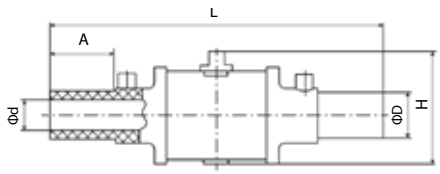

Nominal Size Φ D X Φ D1	L	A	H	Φ D
50	495	90	200	41
63	505	100	200	49
90	660	110	325	70
110	660	115	325	87
160	770	115	420	126
200	785	125	430	158
250	980	140	585	204
315	985	140	585	250

TWO-PURGE BALL VALVE

Technical Details

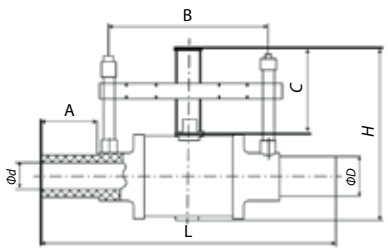

Nominal Size Φ D X Φ D1	L	A	B	C	H	Φ D
90	660	110	330	590	835	70
110	680	115	330	590	830	87
160	760	115	415	590	800	126
200	780	125	435	600	935	158
250	980	140	585	700	1210	204
315	985	140	585	700	1245	250

ONE-PURGE BALL VALVE

Technical Details

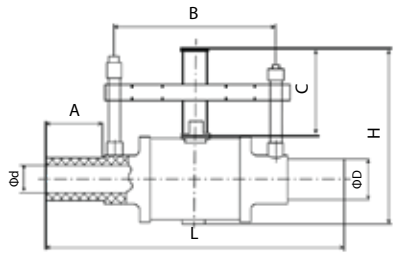

Nominal Size Φ D X Φ D1	L	A	B	C	H	Φ D
90	660	110	330	590	835	70
110	680	115	330	590	830	87
160	760	115	415	590	800	126
200	780	125	435	600	935	158
250	980	140	585	700	1210	204
315	985	140	585	700	1245	250

NYLON COATED FLANGE PLATE (PN 1.0 MPa)

Technical Details

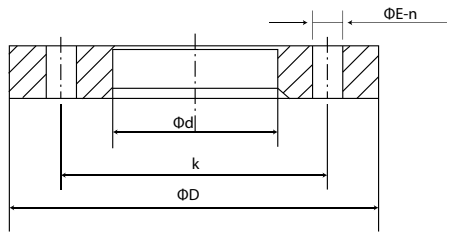

Nominal Size		Φ D	Φ d	K	Φ E	n	Bolt
In PE	Commonly known as						
40	32	130	47	100	18	4	M16
50	40	140	57	110	18	4	
63	50	155	70	125	18	4	
75	65	177	82	145	18	4	
90	80	190	97	160	18	8	
110	100	212	117	180	18	8	
125	100	212	132	180	18	8	
140	125	240	147	210	18	8	
160	150	277	167	240	22	8	M20
180	150	277	187	240	22	8	
200	200	330	207	295	22	8	
225	200	330	232	295	22	8	
250	250	385	257	350	22	12	

Nominal Size		Φ D	Φ d	K	Φ E	n	Bolt
In PE	Commonly known as						
225	200	330	232	295	22	8	
250	250	385	257	350	22	12	
280	250	385	287	350	22	12	
315	300	440	325	400	22	12	
355	350	500	365	460	22	16	
400	400	560	410	515	26	16	
450	450	610	460	565	26	20	M24
500	500	665	510	620	26	20	

NYLON COATED FLANGE PLATE (PN 1.6 MPa)

Technical Details

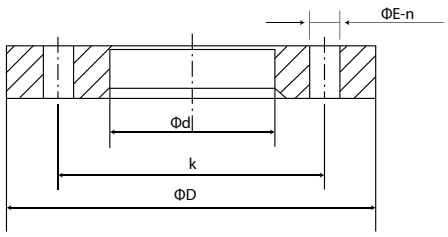

Size		PE Φ D1	K	Φ E	n
Nominal	Commonly known as				
40	32	130	100	18	4
50	40	140	110	18	4
63	50	155	125	18	4
75	65	177	145	18	4
90	80	190	160	18	8
110	100	212	180	18	8
125	100	212	180	18	8
140	125	240	210	18	8
160	150	277	240	22	8
180	150	277	240	22	8
200	200	330	295	22	8
225	200	330	295	22	8
250	250	400	355	26	12

Size		PE Φ D1	K	Φ E	n
Nominal	Commonly known as				
280	250	400	355	26	12
315	300	445	410	26	12
355	350	505	470	26	16
400	400	565	525	30	16
450	450	625	585	30	20
500	500	700	650	34	20

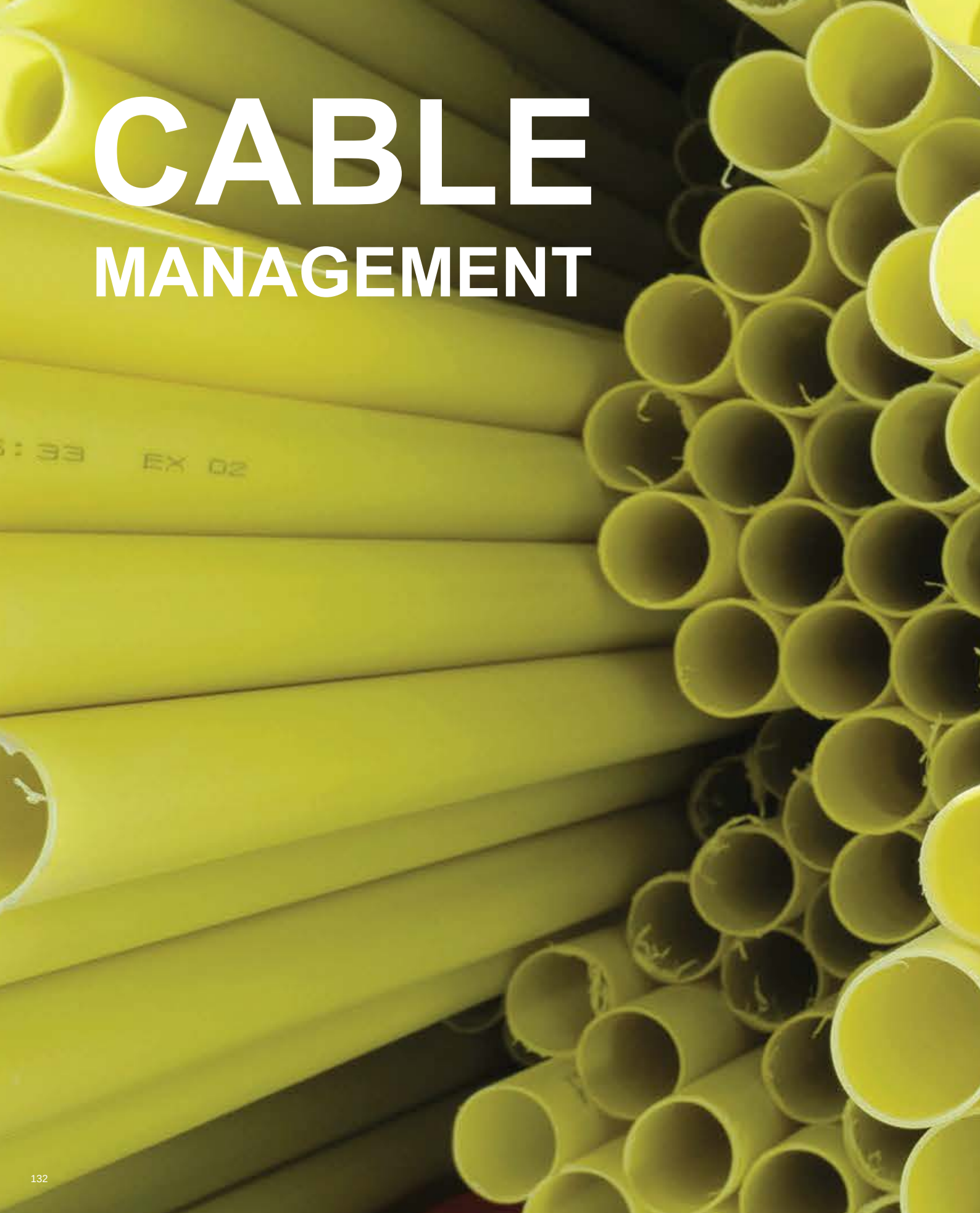

CABLE MANAGEMENT

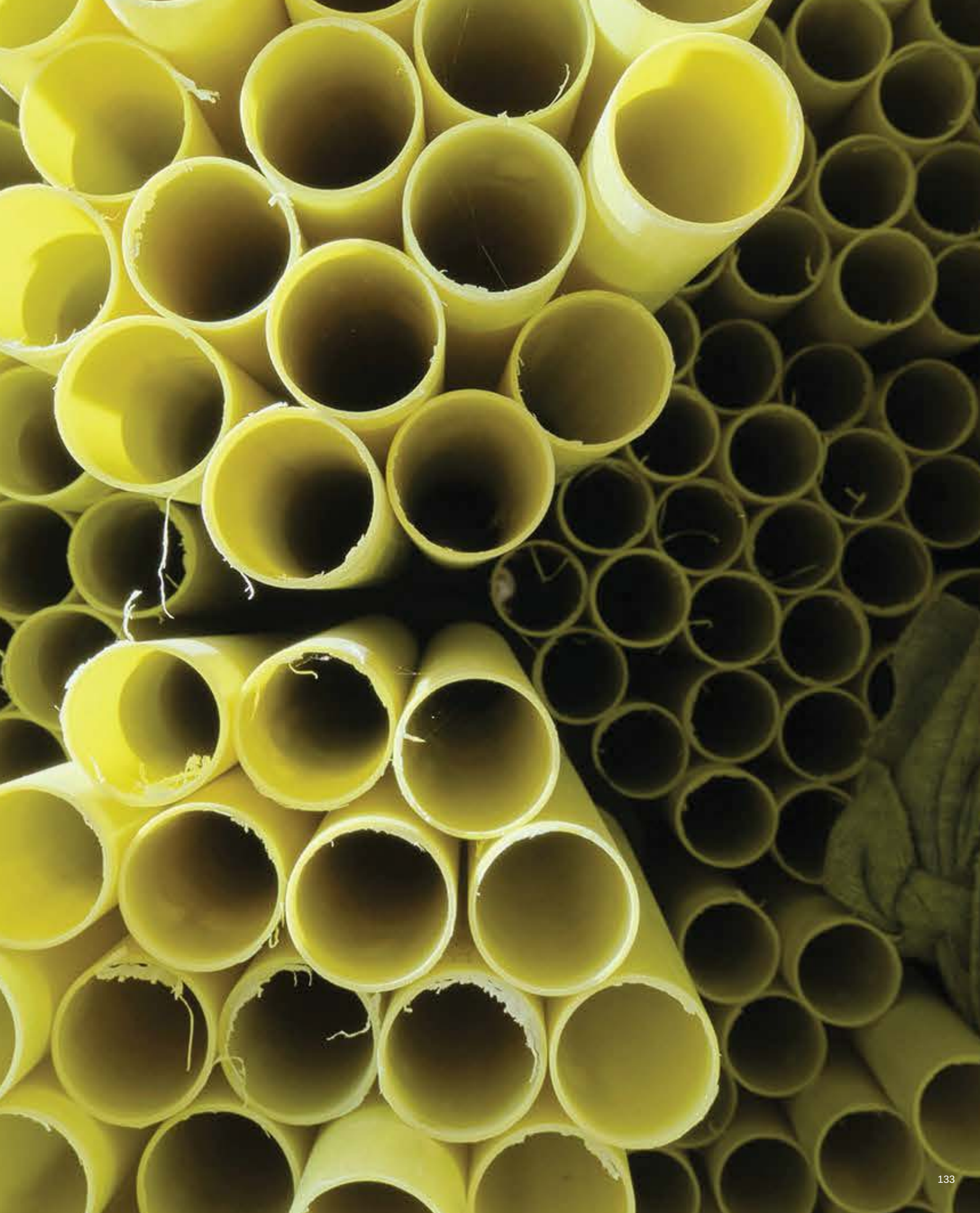

uPVC
CONDUITS

SIZE	MEAN OUTSIDE DIAMETER (MM)		WALL THICKNESS (MM)		LENGTH (MM)	COLOUR
mm	Min	Max	Min	Max		
16	15.9	16.1	0.6	0.8	4000±10	Yellow
20	19.0	19.2	0.7	0.9	4000±10	Yellow
25	25.0	25.2	0.8	1.0	4000±10	Yellow
32	32.0	32.3	1.0	1.2	4000±10	Yellow
40	40.0	40.3	1.0	1.2	4000±10	Yellow
50	50.0	50.3	1.0	1.2	4000±10	Yellow
63	63.0	63.3	1.1	1.3	4000±10	Yellow
20	19.8	20.0	1.9	2.1	4000±10	White
25	24.8	25.0	2.0	2.2	4000±10	White
32	31.8	32.0	2.5	2.7	4000±10	White
16	15.8	16.0	0.8	0.9	4000±10	White
20	19.8	20.0	0.9	1.0	4000±10	White
25	24.8	25.0	0.9	1.0	4000±10	White

PHOENIX

uPVC CABLE TRUNKING

SIZE	WIDTH	HEIGHT	LENGTH	COLOUR
mm	mm	mm	mm	
16x12.5	16 ± 0.5	12.5 ± 0.5	2900	White
20x12.5	20 ± 0.5	12.5 ± 0.5	2900	White
25x16	25 ± 0.5	16 ± 0.5	2900	White
32x16	32 ± 0.5	16 ± 0.5	2900	White
40x16	40 ± 0.5	16 ± 0.5	2900	White
50x25	50 ± 0.5	25 ± 0.5	2900	White
50x50	50 ± 0.5	50 ± 0.5	2900	White
75x50	75 ± 0.5	50 ± 0.5	2900	White
100x50	100 ± 0.5	50 ± 0.5	2900	White
100x75	100 ± 0.5	75 ± 0.5	2900	White
100x100	100 ± 0.5	100 ± 0.5	2900	White

SOLVENT CEMENT

PHOENIX
PRO WELD

SOLVENT CEMENT

NET CONTENT
25g
50g
100g
250g
500g
1000g

ashirvad
by aliaxis
FOR CPVC, PVC
PURPLE PRIMER
DANGER!
Net Vol. When Packed
237 ml. (8 fl. oz.)

ashirvad
by aliaxis
HEAVY BODIED CPVC
ORANGE SOLVENT CEMENT
DANGER!
Net Vol. When Packed
473 ml. (16 fl. oz.)

YELLOW
CPVC CEMENT
HOT AND
COLD WATER
HEAVY-BODIED

ashirvad
by aliaxis
1-STEP CPVC CEMENT
FLOWGUARD PLUS
DANGER:
Net Vol. When Packed
473 ml. (16 fl. oz.)

ashirvad
by aliaxis
1-STEP CPVC CEMENT
FLOWGUARD PLUS
DANGER:
Net Vol. When Packed
118 ml. (4 fl. oz.)

ashirvad

ashirvad
by aliaxis
YELLOW
CPVC CEMENT
HOT AND
COLD WATER
HEAVY-BODIED

FLOWGUARD 1 - STEP
ADHESIVE SOLUTION

NET CONTENT
15ml
29.5ml
59ml
118ml
237ml
473ml

PRIMER P70

NET CONTENT
273ml
472ml

HARDWARE ACCESSORIES

PAINT BRUSH

SIZE	
Inch.	mm
1/2	12
1	25
1 1/2	38
2	50
2 1/2	63
3	75
4	100
5	125
6	150

BIDET
SHOWER SET

SIZE			COLOUR
mm	Inch.	Length (cm)	
20	1/2	120	
20	1/2	120	
20	1/2	120	
20	1/2	120	
20	1/2	120	

BIDET SHOWER HEAD

SIZE		COLOUR
mm	Inch.	
20	1/2	
20	1/2	
20	1/2	
20	1/2	
20	1/2	

FLEXIBLE SHOWER HOSE

SIZE		
mm	Inch.	Length (mm)
20	1/2	30
20	1/2	45
20	1/2	60
20	1/2	90
20	1/2	120

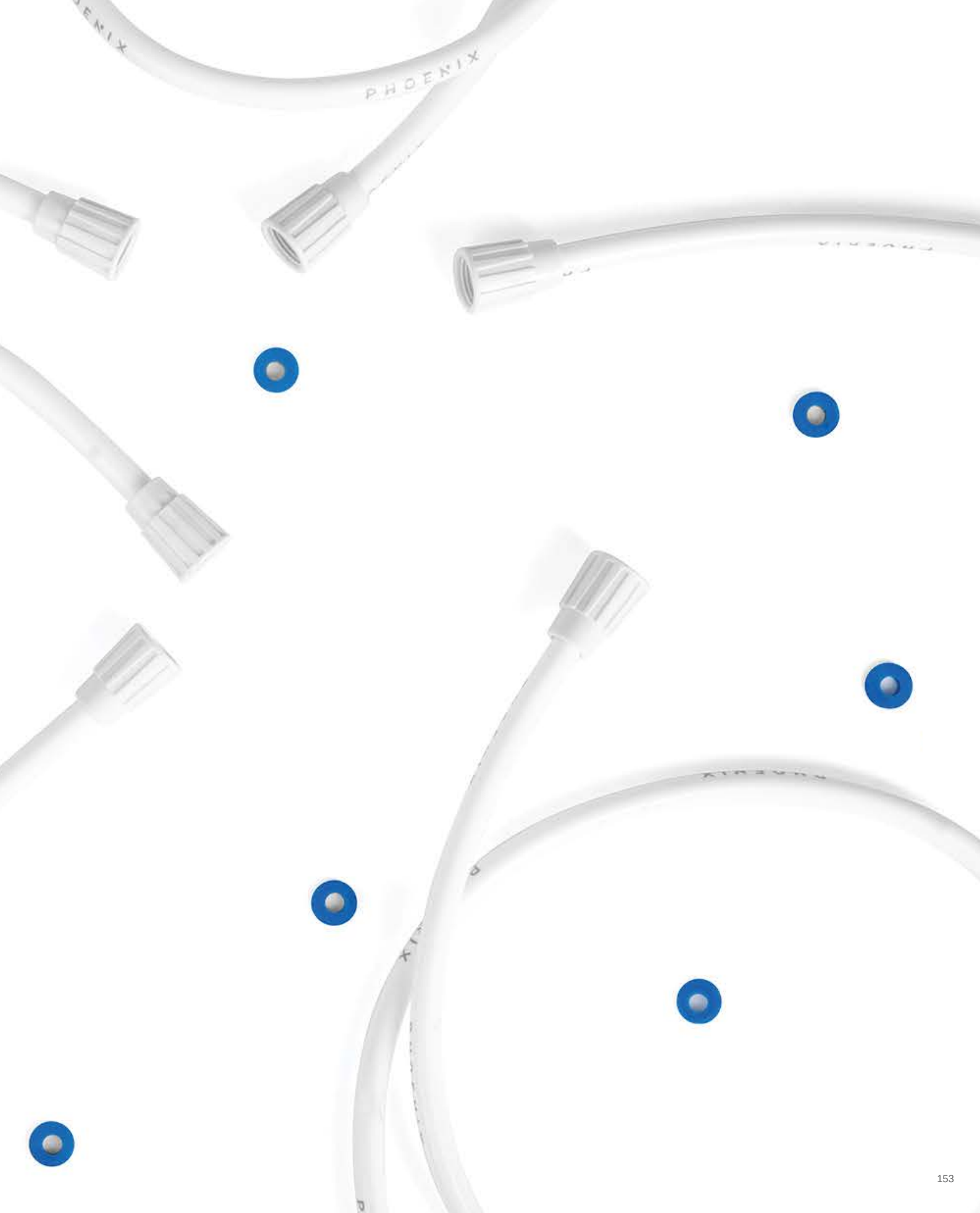
PHOENIX

KITCHEN
SINK

NO	ITEM	LENGTH	WIDTH
		Inch.	Inch.
1	KITCHEN SINK (BOWL WITH DRAIN)	36	18
2	KITCHEN SINK (SQUARE BOWL)	18	16
3	KITCHEN SINK (SQUARE BOWL)	20	17
4	KITCHEN SINK (ROUND BOWL)	18	18
5	KITCHEN SINK (SQUARE BOWL)	14	14

SWAN NECK TAP (LARGE)

WITH LEVER HEAD

SIZE	
mm	Inch.
20	1/2

uPVC BALL VALVES WITH BLUE HANDLE

SIZE	WIDTH
Inch.	mm
1/2	20
3/4	25
1	32
1 1/4	40
1 1/2	50
2	63

SUPER PVC
3/4"
0.3g/cm³-19mmx0.075mmx10
THREAD SEAL (P.T.F.E)

SUPER PVC
3/4"
3/4"
THREAD SEAL (P.T.F.E.)

THREAD SEAL

SIZE	WIDTH	LENGTH	THICKNESS	DENSITY
Inch.	mm	m	mm	
1/2	12	10	0.075 - 0.3	0.3g / cm^3
3/4	19	10	0.075 - 0.3	0.3g / cm^3
1	25	10	0.075 - 0.3	0.3g / cm^3

PVC
BASIN TAP
LEVER HEAD

PVC
BASIN TAP
DIAMOND HEAD

GARDEN
TAP

SIZE	
mm	Inch.
20	1/2

ALUMINIUM BOX

BEAM LEVEL (30CM)

STEEL MEASURING TAPE (5M)

PVC GARDEN HOSE

Nominal Size of Hose	Mean Internal Diameter (mm)		Wall Thickness (mm)		Length (m)		Color
	Min.	Max.	Min.	Max.	Min.	Max.	
12.5 mm (½")	12.4	12.9	1.7	2.1	30.0	30.5	
					15.0	15.5	
19.0 mm (¾")	19.0	19.4	2.1	2.4	30.0	30.5	
					15.0	15.5	
25.0 mm (1")	24.0	25.0	2.8	3.2	30.0	30.5	
					15.0	15.5	
32.0 mm (1 ¼")	30.9	31.7	3.0	3.8	30.0	30.5	
					15.0	15.5	

OUR PROJECTS

HYATT REGENCY HOTEL

PROJECT NAME	Hyatt Regency Hotel
LOCATION	Colombo 03
APPLICATION	Cold Water Application
PLUMBING CONTRACTOR	Trans-Gulf Electro

MOVENPICK HOTEL

PROJECT NAME	Movenpick Hotel
LOCATION	Colombo 03
APPLICATION	Chilled Water Lines
PLUMBING CONTRACTOR	Softlogic AC

BRANDIX HEAD OFFICE

PROJECT NAME	Brandix Head Office
LOCATION	Colombo 03
APPLICATION	Hot & Cold Application
PLUMBING CONTRACTOR	RN Construction

Contact Us

Phoenix Showrooms:

Welisara
No. 445, Negombo Road, Welisara,
Sri Lanka.
Tel: +94 (0) 77 312 4745

Panadura
No. 12, Mahanama Road, Panadura,
Sri Lanka.
Tel: +94 (0) 74 138 8058

Battaramulla
No. 260/1, Pannipitiya Road, Pelawatta,
Battaramulla, Sri Lanka.
Tel: +94 (0) 11 254 9971 / 77 494 3659 / 71 525 7154

Factory:

Phoenix Industries Ltd
Industrial Zone East, Makandura, Gonawila,
Sri Lanka.
Tel: +94 (0) 777 889 999
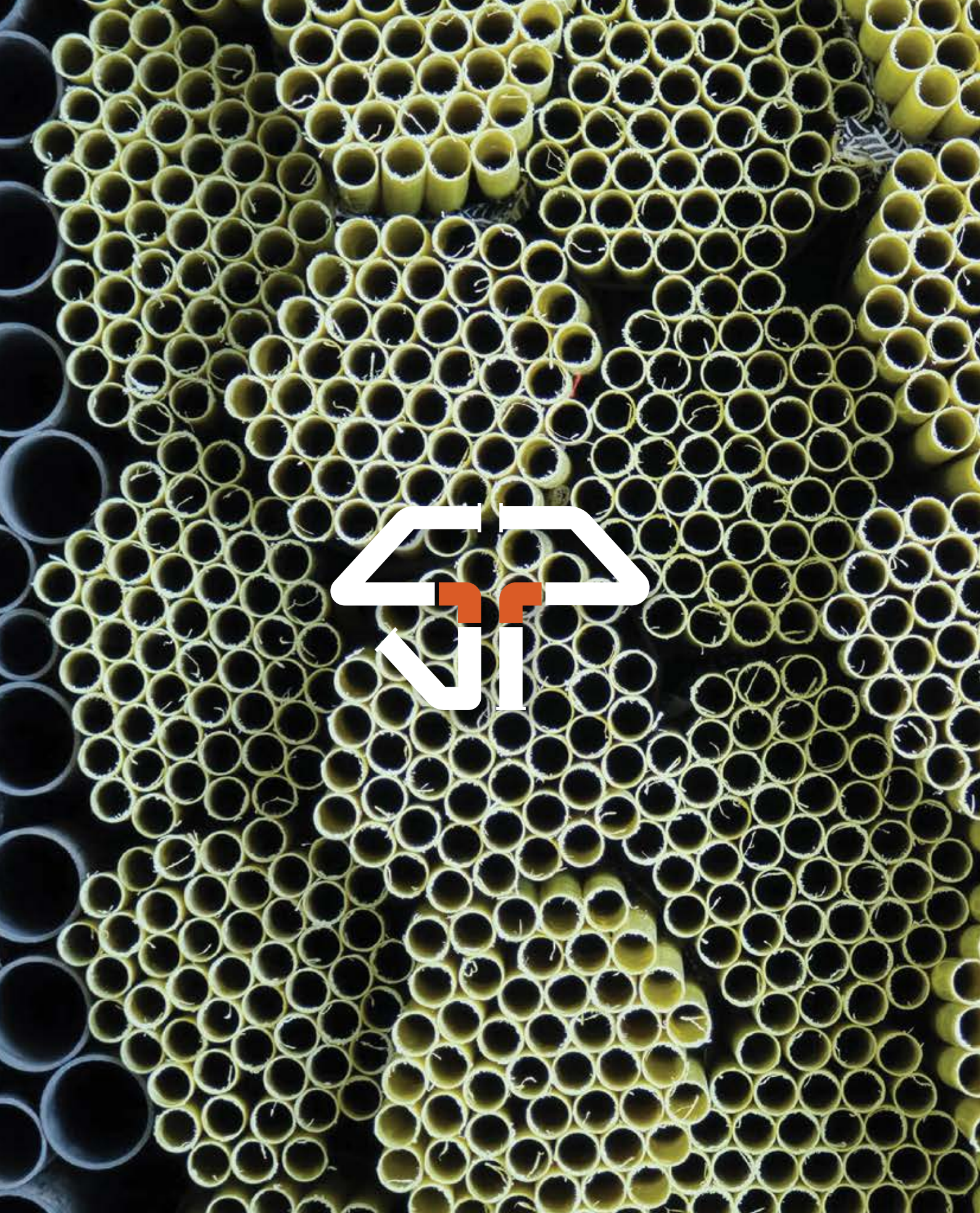
www.superpvc.lk